SOA 106
$3.50

# VISUAL READING AND BRAILLE READING: An Experimental Investigation of the Physiology and Psychology of Visual and Tactual Reading

BY T. KUSAJIMA

HV1669
.968
1974

Digitized by the Internet Archive
in 2015

https://archive.org/details/visualreadingbra00tkus

HV1669
K968.
copy H15

# VISUAL READING AND BRAILLE READING: AN EXPERIMENTAL INVESTIGATION OF THE PHYSIOLOGY AND PSYCHOLOGY OF VISUAL AND TACTUAL READING

Prof. Dr. med. T. Kusajima
Tokyo University of Education

Leslie L. Clark
Zofja S. Jastrzembska
Editors

American Foundation for the Blind/1974

This is a State of the Art Report of the AFB International Research Information Service, Leslie L. Clark, editor.

Published in 1974 by the American Foundation for the Blind, Inc., 15 West 16th Street, New York, N.Y. 10011 USA

---

Printed in the United States of America

# FOREWORD

No one would dispute the importance of reading. Literacy is basic to modern civilization. If this is true for the population in general, it holds doubly for the blind person who is cut off from the vast amount of information the sighted person receives just by looking at the world around him. Yet there has been little concentrated research into the physiological and psychological bases of the differences--and similarities--between visual and tactual reading despite the widespread interest in the differences between visual and haptic (i.e., tactile) perception in general.

Thus the publication of *Visual Reading and Braille Reading: An Experimental Investigation of the Physiology and Psychology of Visual and Tactual Reading* is particularly welcome. This monograph is the culmination of 35 years of work by the author, Dr. T. Kusajima, an M.D. and a retired professor at Tokyo University. Dr. Kusajima, who has also served on the research staff at the National Language Research Institute of Japan, wrote *Visual Reading and Braille Reading* while serving as guest professor at the Pedagogische Hochschule in the Ruhr, West Germany, in 1968-69. A German language edition of part of this study, called *Experimentelle Untersuchungen über Tastlesen und Augenlesen*, was published in 1969 by Schindele Verlag, Heidelberg.

M. Robert Barnett
Executive Director
American Foundation for the Blind

# INTRODUCTION

Despite its importance in civilized cultures, the process of reading is still not well understood, and what is understood is not widely known. Only in the first half of the twentieth century were experiments undertaken by Huey (1908) to study eye movements during reading. These primitive, but careful, studies of visual reading have since been followed by many others in the fields of psychology, pedagogy, and ophthalmology.

The reading process among blind persons, however, is still largely unexplored and, despite the clamor for the welfare of the blind, few research studies have been conducted in this area. The author undertook to remedy this oversight some 35 years ago. Until then, only one theory of tactual reading--that of Heller (1895) concerning the interaction of synesthetic and analytic taction--had been suggested. In the present monograph, a fresh formulation, derived from *Gestalt* theory and correlative experiments, is offered.

Comparative tests were made to discover the similarities and the differences between visual and tactual reading. And it was learned, for example, that although visual reading is characterized by pausing and tactual reading by movement, they are functionally similar: both require performance of the dual task of discerning distinctive features and of integrating the differentiations into a totality of meaning. On a more mechanical level, the number and duration of eye pauses in visual reading is comparable with the direction and extent of finger movement in tactual reading.

These findings appear to be relatively new and, because the experiments have heretofore only been described in Japanese journals, it is doubtful that English-speaking readers would have easy access to them. (A recent German edition of part of this monograph has appeared.) It was the author's good fortune to be invited to serve as a guest professor at the Educational University of the Ruhr during 1968-1969, where this work was described in lectures. It was during this period that it was decided to translate this material for critical review by the author's European and American colleagues; this is the genesis of the present version. It need hardly be said that the author would welcome criticism of the inadequacies of the work reported in this volume. At the same time, he would be most gratified were this report to contribute in some small way to an enhanced international exchange of knowledge.

A profound debt of gratitude is owed to Professor Doctor Werner Boldt, Pedagogische Hochschule, the Ruhr, for his cordiality, his friendship, and his aid in bringing this work before a wider audience.

--T. Kusajima

CONTENTS


| | Page |
|---|---|
| FOREWORD | iii |
| INTRODUCTION | v |
| PART ONE. THE PSYCHOLOGY OF BRAILLE READING | 1 |
| Functional Differentiation of the Fingers | 1 |
| Subjects and Test Apparatus | 1 |
| Interpretation of the Tactual Line | 2 |
| Preparing for the Experimental Run | 2 |
| Reading Materials | 4 |
| Discussion | 4 |
| Results | 4 |
| The Experiment | 4 |
| Results | 6 |
| Finger Function in Bimanual Reading | 6 |
| Functions of Nonreading Finger | 8 |
| Reading Materials | 10 |
| Results | 10 |
| Discussion | 10 |
| Characteristics of Bimanual Braille Reading | 12 |
| Reading Functions and Readers' Attitudes | 12 |
| Characteristics of Readers | 12 |
| Average Readers | 15 |
| Orientation to Understanding | 16 |
| Return Movements Between Braille Lines | 16 |
| One-Handed Reading | 16 |
| Bimanual Reading | 17 |
| The Accompanying Finger | 18 |
| Dominant and Subordinate Letters | 18 |
| The Apparatus | |
| The Reading Materials | 18 |
| Procedure | 19 |
| Results | 19 |
| Finger Pressure During Braille Reading | 19 |
| The Experiment | 19 |
| Results | 19 |
| Expert Readers | 20 |
| Conclusions | 22 |
| PART TWO. PRIOR EXPERIMENTAL RESEARCH ON EYE MOVEMENTS | 23 |
| During Reading | 23 |
| Early Observation of Eye Movement | 23 |
| Results | 23 |
| Direct Recording of Movements | 23 |
| Recording Pause-Time | 24 |
| Modern Modifications | 24 |
| Findings on Eye Movements | 26 |
| Pauses | 26 |
| Convergence | 26 |
| Other Movements | 28 |
| Fixation Pauses | 28 |
| Number and Line Length | 28 |
| Number and Duration | 29 |
| Pause Duration | 30 |
| Jumps or Flying Movement | 30 |
| Location of Pauses | 31 |
| Pause Habits | 32 |
| Reading Conditions and Individual Differences | 32 |
| Proofreading | 32 |
| Test-Taking | 32 |
| Reading of Numbers | 32 |
| Formulas | 33 |
| Foreign Languages | 33 |
| Return Movements | 33 |
| Regressive Movement | 33 |
| PART THREE. EXPERIMENTAL STUDIES USING ARTIFICIAL MOBILE EYES AND CONTACT LENSES | 35 |
| Using an Artificial Mobile Eye and a Kymograph Drum--Experiment I | 35 |
| The Apparatus | 35 |
| Subjects and Materials | 36 |
| Instructions | 36 |
| Recording the Results | 36 |
| Interpretation | 37 |
| Results | 37 |
| Using a Light Beam Reflected From a Mirror on the Artificial Eye Base--Experiment II | 40 |
| The Apparatus | 41 |
| Subjects and Materials | 41 |
| Procedure | 41 |
| Recording the Results | 41 |
| Results | 42 |
| Using a Light Beam Reflected From a Mirror on a Contact Lens--Experiment III | 43 |
| The Apparatus | 43 |

CONTENTS (Continued)


| | Page |
|---|---|
| Subjects and Materials | 45 |
| Procedure | 45 |
| Results | 45 |
| Using an Ophthalmograph--Experiment IV | 49 |
| The Apparatus | 49 |
| Subjects and Method | 49 |
| Results | 50 |
| Conclusion | 50 |
| Future Research | 53 |
| PART FOUR. A COMPARISON OF VISUAL AND TACTILE READING | 54 |
| Pause | 54 |
| Movement | 54 |
| Pause Time | 54 |
| Number of Pauses | 54 |
| Span | 55 |
| Location of Pauses | 55 |
| The Function of Pauses | 55 |
| The Function of Flying Movements | 55 |
| The Function of Pauses and Movements | 55 |
| Methods of Perception | 56 |
| Dominant and Subordinate Characters | 56 |
| Good and Poor Reading | 56 |
| Return Sweeps and Movements Between Lines | 57 |
| Both Eyes and Both Hands | 57 |
| Summary | 58 |
| BIBLIOGRAPHY | 59 |


FIGURES


| | | |
|---|---|---|
| 1. | The Tactual Recorder | 3 |
| 2. | The Tactual Recorder--End View | 3 |
| 3. | Kymograph Recording Device--Top View | 3 |
| 4. | Kymograph Recording Device--Detail | 3 |
| 5. | Kymograph Recording Device--Side View | 5 |
| 6. | Kymograph Recording Device--Detail | 5 |
| 7. | Kymograph Recording Device--In Operation | 5 |
| 8. | Record of Bimanual Braille Reading--Example I | 7 |
| 9. | Record of Bimanual Braille Reading--Example II | 7 |
| 10. | Records of Finger Movements During Reading of Single Lines of Braille | 7 |
| 11. | Records of Finger Movements During Braille Reading | 9 |
| 12. | Apparatus for Controlled Presentation of Braille Reading Materials | 11 |
| 13. | Records of Finger Movements by Slow, Average, and High-Speed Readers | 15 |
| 14. | Apparatus for Recording Finger Pressure During Braille Reading | 20 |
| 15. | Records of Finger Pressure | 21 |
| 16. | Apparatus for Mechanically Recording Eye Movement During Reading | 25 |
| 17. | Records of Eye Movements Using Mechanical Method | 25 |
| 18. | Apparatus for Photographically Recording Eye Movement During Reading | 25 |
| 19. | Photographic Record of Eye Pauses During Reading | 27 |
| 20. | Photographic Records of Eye Pauses During Prolonged Reading | 27 |
| 21. | Photographic Record of Eye Pauses During Reading (After Gray) | 27 |
| 22. | Structure and Placement of the Artificial Eye | 39 |
| 23. | Kymograph Apparatus for Recording Movements of the Artificial Eye | 39 |
| 24. | Records of Movements of the Artificial Eye During Reading With the Good Eye | 39 |
| 25. | Placement of Mirror on Artificial Eye Stump | 39 |
| 26. | Apparatus for Photographically Recording Movements of the Artificial Eye | 39 |

FIGURES (Continued)


| | | Page |
|---|---|---|
| 27. | Photographic Records of Artificial Eye Movement | 47 |
| 28. | Placement of Contact Lens and Mirror | 47 |
| 29. | The Ophthalmograph | 47 |
| 30. | Ophthalmograph Record of Movement of Both Eyes | 47 |


TABLES


| | | |
|---|---|---|
| 1. | Comparison of Bimanual and One-Handed Reading Times | 8 |
| 2. | Single-Handed Reading | 13 |
| 3. | Bimanual Reading | 14 |
| 4. | Relationship of Number of Pauses to Line Length | 29 |
| 5. | Results of Buswell's Developmental Research | 30 |
| 6. | Reading Materials Used in Study of Eye Movements | 36 |
| 7. | Movements of Artificial Eye--Experiment I | 40 |
| 8. | Movements of Artificial Eye--Experiment II | 43 |
| 9. | Movements of Artificial Eye--Experiment II--by Line Length | 44 |
| 10. | Pause-Time for Lines of Various Lengths--Experiment III | 46 |
| 11. | Number of Pauses per 100 Letters--Experiment III | 48 |
| 12. | Pause-Time for Lines of Various Lengths--Experiment IV | 51 |
| 13. | Number of Pauses per 100 Letters--Experiment IV | 52 |

# PART ONE. THE PSYCHOLOGY OF BRAILLE READING

In this section we will examine in detail Heller's theory of perception in braille reading, and particularly that portion of the theory concerning the integration of synthetic and analytic taction. We end with an alternative theoretical analysis based on this critical review.

## FUNCTIONAL DIFFERENTIATION OF THE FINGERS

The core argument of Heller's *Studien zur Blindenpsychologie* (1895) is that in two-handed braille reading, one hand takes on the function of synthesis, the other the function of analyzing the braille characters. Cells--letters--are thus perceived through the integration of both functions. It is evident that if this is true, the two-handed reader should be seriously hampered in reading braille if one hand's function is removed (by preventing the use of that hand). Yet almost all readers of braille deny that this is the case, both in reporting their task behavior and in their introspection about what they do. Thus, the major burden of the first set of experiments was to verify what functions were served by each hand, first through a re-examination of Heller's research.

### Subjects and Test Apparatus

The subjects for this study were students at the Tokyo School for the Blind, a total of 164 students, both boys and girls, ten to 23 years of age, totally blind and partially seeing. All were instructed to read silently the material presented to them, while using the testing apparatus which consisted of a tactual recorder and a recording device.

The tactual recorder (Figure 1) consists of three parts: a ring, an arm, and a stylus. The ring (6) has a long arm (7) which, during the experimental run, is fastened to the upper horizontal wall of the ring with a screw (3). The ring is fastened at a point between the first and second joints of the index finger (10). At the end of the arm a sheath is provided (9) in which a stylus (8) or a copy pencil can be inserted. The sheath is so designed that it always stands vertical. The angle of the arm to the line of braille, but not to the paper, can be adjusted freely. It can be loosened from the ring or fixed to it, according to how the angle of the reading finger is related to the line of braille that is read. The arm can also be adjusted for length. Figure 2 shows detail of the device in end view.

The recording device is a cymograph (Figures 3 and 4), which consists of a drum (15) which revolves horizontally, a hand-set reading material stand (2) on which a sheet (12) of reading material (11) is laid, and time (4) and word (5) markers. The markers operate through Bernstein's Interrupter, actuating a battery-fed double magnet marker held fast on a universal stand.

The horizontal drum (15) is placed under the horizontal hand-set reading frame, and the edge of the reading frame and the shaft of the drum are made precisely parallel. A sheet of paper containing reading material is placed in the hand-fed frame, the lines of text parallel to the edge of the frame. The stylus (8) carried by the reading finger is designed so that it falls vertically on the rotating horizontal drum just below the reading frame as the finger is moved during reading. The arm (7) is adjusted so that in use the stylus is held vertically on a line orthogonal to the line of braille that is being read. (These relationships are made clear in Figures 3 through 7.)

The length of the smoked paper (14) on the drum serves as a time base for gauging speed, since it rotates at a uniform speed. It can be

measured by the stylus of the time marker operating through Bernstein's Interrupter. This stylus is part of the double magnet system mentioned above; the other stylus on the system connects to a key under the control of the experimenter, who uses it to mark the word intervals in the sentences of the reading material. When the two stylii touch the right or left edge of the smoked paper, they indicate the time line and the word line.

Recorded traces run parallel to each other. One of the two traces is a time line, the other a word line. Marks are made at desired points in the sentences (such as word intervals) predetermined by the experimenter, so that when the reading finger of the subject touches one of the marks, the experimenter presses the stylus key, and a mark is made on the word line. With this technique, the experimenter can relate the movements of the finger to each part of the sentence in the reading material.

The double magnet assembly is held fast in a universal stand, and both styli are adjusted to touch the paper with only a moderate pressure. The drum, about 30 cm in diameter and 45 cm in length, is rotated by an electric motor.

The two styli of the double magnet system markers and the two styli of the tactual recorders are arranged prior to the experiment so that all styli are in a straight line and parallel to the front edge of the frame containing the reading material (see Figures 3, 4, and 7).

## Interpretation of the Tactual Line

The tactual line (18/18') corresponds point by point to the reading material immediately in front of it. The position point which correspoints with the beginning of a line of reading material should be determined first on the tactual line, then the reading material placed so that the starting points correspond with one another. The reading material must then be moved to a position vertical to the time line, since the four styli of the recorders are preadjusted to fall on the same straight line; thus the portion of the tactual line corresponding to each point in the reading material can be obtained easily (see Figures 4, 8, and 9).

The record of the tactual movements is the resultant of horizontal movements on paper sliding away with uniform speed in a direction orthogonal to the line of braille. Finger movements and the rotation of the drum must therefore be considered jointly. At one extreme, if the finger should stop during the reading, the tactual line would be a straight line. If the finger moves slowly, the tactual line would be a nearly vertical line (see Figure 10A), while if the finger moves rapidly, the tactual line is close to horizontal (see Figure 10B). When an expert reader scans the text material very quickly and smoothly, the tactual line obtained is an almost straight line close to the horizontal (as in Figure 10B). If the scanning speed accelerates on a line of braille, the tactual line assumes a generally concave shape (see Figure 10C); if the finger decelerates, the tactual line becomes generally convex (see Figure 10D). If scanning the braille line includes pauses in finger movement, the curve is displaced according to what movements are made (see Figures 10G and 10H, and Figure 13B).

## Preparing for the Experimental Run

Before the experiment begins, the subject is seated before the reading material placed in the reading material frame. He is instructed in wearing the tactual recorder, and in adjusting the length and direction of its arm so the stylus falls on the appropriate position of the smoked paper. The fingers are positioned at the blank space before the beginning of the sentence the subject is to read. He starts when he is given the command "Begin reading."

If the subject reads using both hands, he places both fingers at the blank space preceding the sentence, the fingers touching lightly at the tips; in this case the two styli of the tactual recorder are just in front of each finger, on a line orthogonal to the line of braille. These styli, and both styli of the

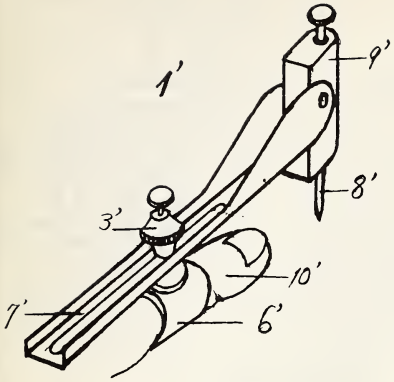


Figure 1. The Tactual Recorder

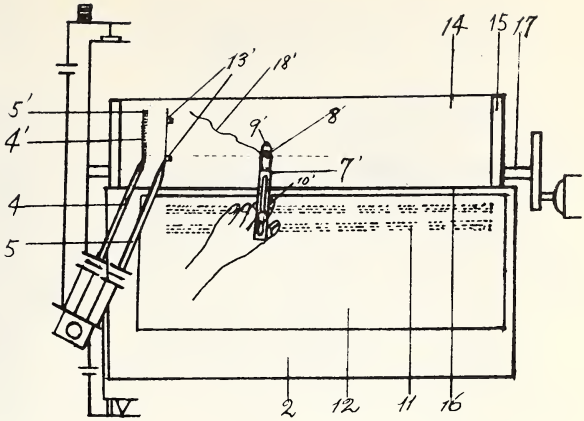


Figure 3. Kymograph Recording Device--Top View

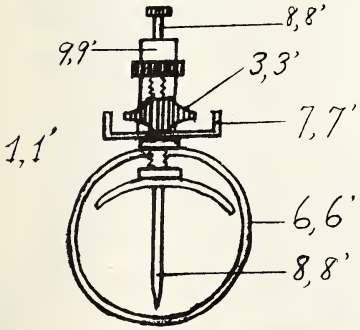


Figure 2. The Tactual Recorder--End View

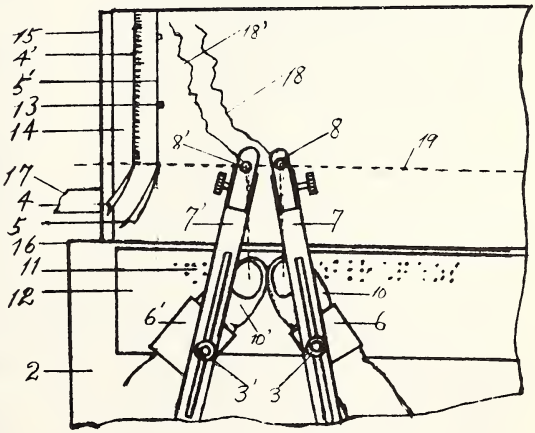


Figure 4. Kymograph Recording Device--Detail

double magnet system, are placed carefully so that all are in a perfectly straight line parallel to the edge of the reading frame.

### Reading Materials

Four types of reading materials were used. The first consisted of short, ordinary, easy-to-read sentences of three to four lines, each line containing 32 braille cells. The second was a series of nonsense words, with a total of 50 braille cells. The third consisted of short sentences containing a total of 50 braille cells, including imperfect cell dots. The fourth was short sentences containing strange or difficult words or phrases.

### Discussion

The Wundt/Heller theory of braille reading holds that when the two hands are used in braille reading, the left hand scans slowly, taking on the analytic function of taction, while the right hand functions synthetically. Therefore, the right hand scans rapidly, appreciating tactually the entire pattern of schema of the whole series of letters (*schematisches Gesamtbild*); while the left hand, scanning slowly, detects character outlines and makes proprioceptive judgments of muscle and joint movements. When reading with one hand, the fingers touch the characters lightly at first to obtain the whole image, then analyze the characters into clear and distinct tactual images by proprioception of muscle and joint movements over the braille cell. In the case of one-handed reading, the two types of scanning are used successively, while in two-handed reading, the two types of scanning are simultaneous.

Furthermore, the left finger takes on the role of analytic taction through exploratory movements, while the right finger takes on the role of synthesis through whole percepts. In general, one might say that the right finger is supposed to catch the rough image of characters through the "space sense" of the finger, while the left finger makes clear and distinct those impressions obtained by the right finger, by means of rapid, small-movement scanning of the character outline.

### Results

In contrast to the prediction of the Wundt/Heller theory, we found that all the tactual lines obtained during two-handed reading of short normal sentences with no strange or unusual words, without exception, showed that both hands run in courses exactly parallel to each other (see Figures 10G and 10H, and Figures 11C and 11D). The experimental fact is in direct contradiction to opinions expressed by both Wundt (1910) and by Heller (1895), and also those of Zech (1918), Hocheisen (1892), Mell (1900), and Bürklen (1924).

Were the Wundt/Heller theory an adequate description of reality, the left- and right-hand tactual lines would not run parallel to one another in our records; rather, the line from the right hand would describe a smooth line and would run quite a bit ahead of the left-hand line which would be a zigzag (see Figures 10E and 10F). Our results are quite to the contrary.

To determine more precisely the functions of each hand during two-handed braille reading, another experiment was carried out. Since all of the two-handed braille readers reported that they could as easily read braille with one hand, and since their introspective reports convinced us that they could dispense with the information provided by the other hand, we decided to compare the performance of skilled braille readers using both hands and using only one hand.

## THE EXPERIMENT

For this experiment, 12 boys and girls, ten to 18 years of age, who read braille with both hands were selected. Two sets of reading materials were prepared, using careful pretests; the experimenter took great care that there were no significant differences between the

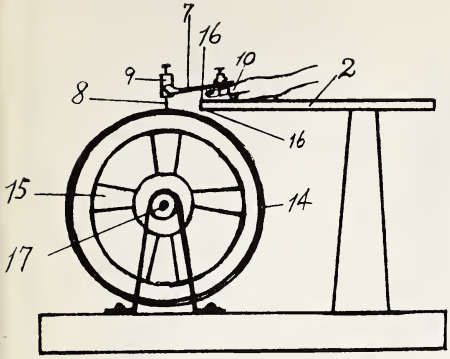


Figure 5. Kymograph Recording Device--Side View

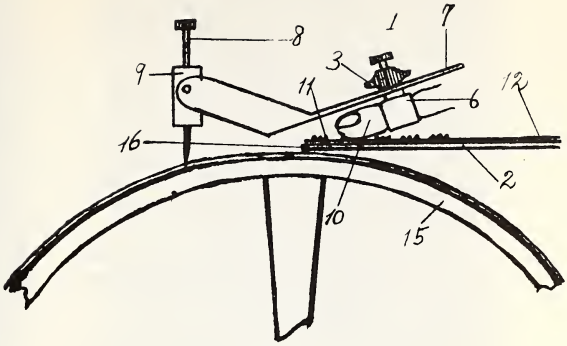


Figure 6. Kymograph Recording Device--Detail

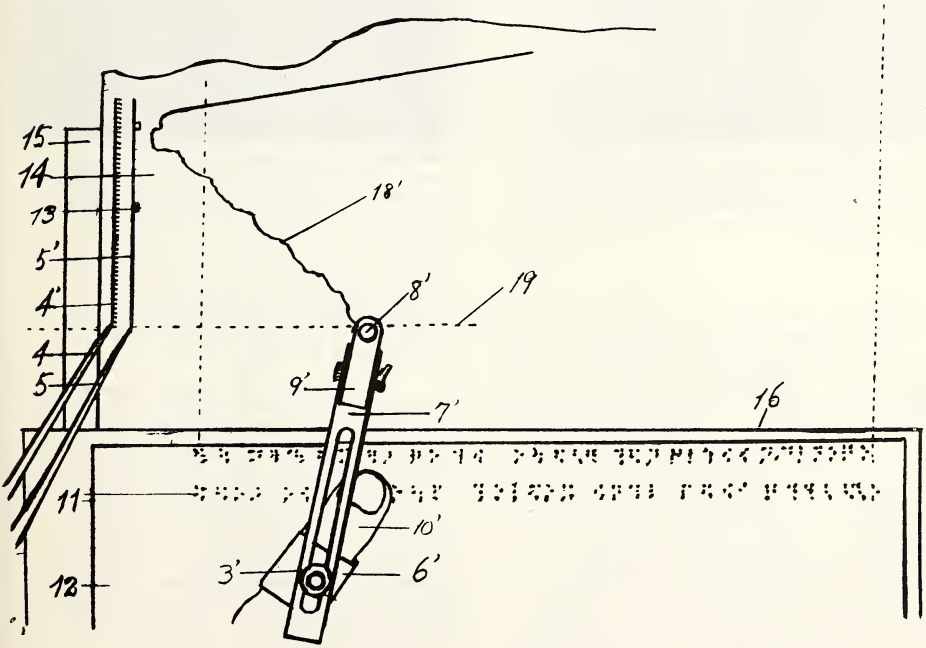


Figure 7. Kymograph Recording Device--In Operation

two sets in length, difficulty, or content. The two types can be considered to be identical in these respects.

The first (A) set was made up of easy, ordinary sentences. The content was drawn from a diary, and consisted of descriptions of summertime. There were 600 braille characters in all. The level of difficulty was that of the fourth grade in primary school.

The second (B) set was also made up of easy, ordinary sentneces, also part of a diary, consisting of descriptions about wintertime, 600 characters in length. Repeated testing indicated no differences in difficulty between this set and the first set in words, phrases, and sentences.

The materials (A and B) were read easily and were seldom misread. From the point of view of perceptual difficulty, therefore, the two sets can be regarded as equivalent, and can be measured on the basis of required reading time alone.

Subjects were queried with which hand they felt they could read better, and were told to use that hand in single-handed reading. They were then asked to read material from the first set with both hands, and after a five-minute rest period, they were asked to read material from the second set with one hand. Both readings were silent.

### Results

A comparison of the reading times for the two sets of materials revealed no significant differences for reading with both hands and reading with one hand. This result is clear and distinct evidence that even with one hand eliminated from the task, the two-handed braille reader can read braille materials without difficulty when the preferred hand is used. There was a small but insignificant increase in reading time for one-handed reading, which was expected. Furthermore, the nonpreferred hand exercised little influence on the preferred hand (or finger) so far as the cooperation between the two is concerned.

On the basis of results from these two experiments, it can be stated decisively that even in two-handed braille reading, one hand is used primarily, while the other plays a very minor role. If the synthetic and analytic functions were indeed divided into important components, one to each hand, the exclusion of one hand from the tactual reading task would result, surely, in an inability to read--or in great difficulty and disruption of the reading process, expressed in enormous increases in reading time (see Table 1).

The conclusion drawn is that, based on these experiments, the division of the braille reading process into the two cooperative functions of synthesis and analysis is inappropriate. Though two fingers may be in use while reading, only one of them is reading.

## FINGER FUNCTION IN BIMANUAL READING

The results just described have told us only what bimanual reading is not; still to be explored is the way in which the fingers move on and between lines of braille, the patterning of pauses and of movements of the fingers, the function of each of the fingers, and the comparison of braille and visual reading. This negative view, following from the author's theory of reading, has refuted the Wundt/Heller theory; the positive view constitutes a new theory of the process of reading braille.

In "normal" or "easy" bimanual reading, one does not find unfamiliar or difficult words or phrases, nor spoiled dots. In such reading, both fingers engage in a sliding motion, using but slight pressure, so that the finger tips brush the cells lightly. Speed of motion is the same for both fingers, and both run in quite similar courses. In contrast, with unfamiliar or difficult materials, or when the dots are indistinct, the fingers often become separated from each other.

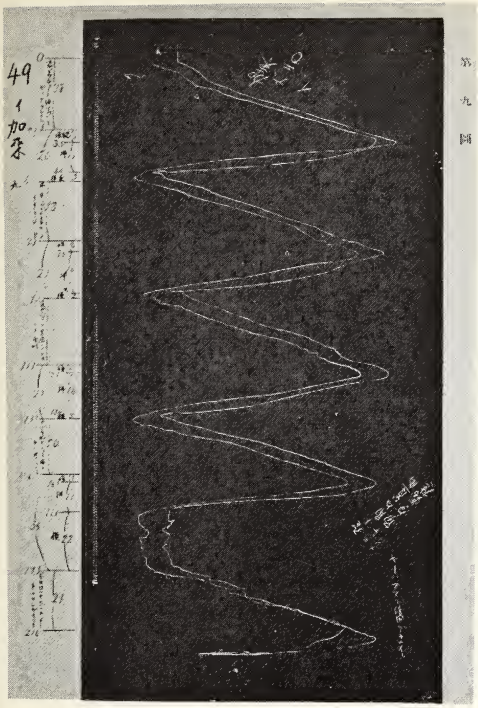

Figure 8. Record of Bimanual Braille Reading--Example I

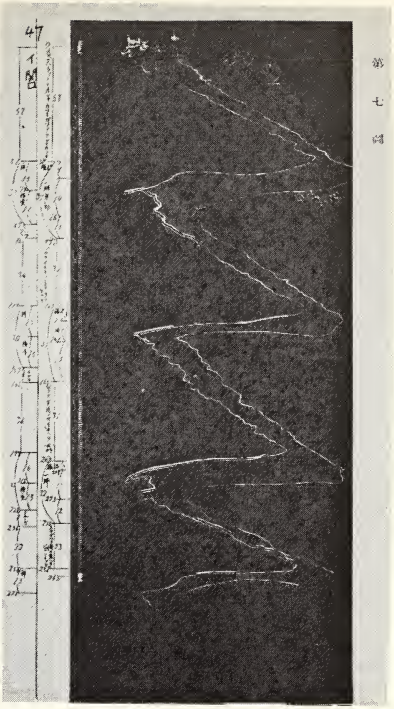

Figure 9. Record of Bimanual Braille Reading--Example II

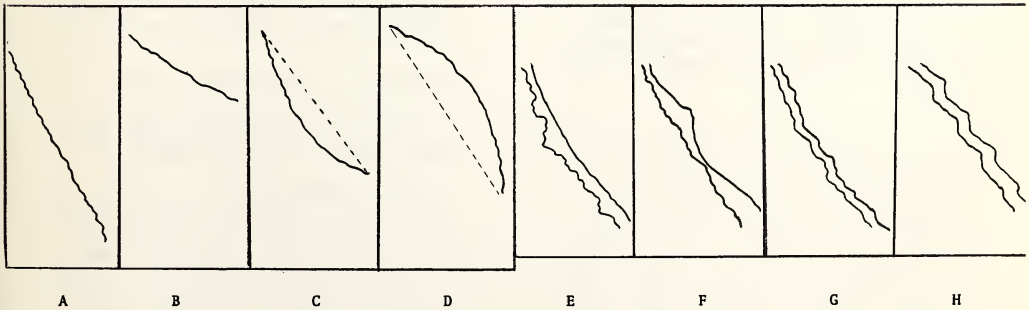


Figure 10. Records of Finger Movements During Reading of Single Lines of Braille

Table 1. Comparison of Bimanual and One-Handed Reading Times

| Subjects | Preferred Hand | Bimanual Reading Time* Material A | Preferred-Hand Reading Time* Material B | Difference in Reading Time |
|---|---|---|---|---|
| Inoue | right | 55 | 55 | 0 |
| Sugi | right | 92 | 90 | -2 |
| Sekiguchi | right | 72 | 94 | +22 |
| Kaku | right | 48 | 48 | 0 |
| Asano | right | 77 | 95 | +18 |
| Kubota | right | 73 | 83 | +10 |
| Segawa | either | 60 | 61 | +1 |
| Nomura | left | 55 | 54 | -1 |
| Shirako | left | 59 | 76 | +17 |
| Kobayashi | left | 59 | 63 | +4 |
| Nanse | either | 44 | 51 | +7 |
| Aihara | left | 65 | 68 | +3 |

*Time unit--seconds

Why is this the normal mode of reading braille? It would be easy to believe that reading with fingertips touching, each finger tracing a parallel tactual line of the same shape, would be the easiest, most natural, and most convenient method for the blind reader. In this view, symmetrical or identical movement shapes would be easy and natural; differently shaped movements would be very troublesome and very difficult.

Introspective reports from blind readers on the matter vary widely from individual to individual. Yet this author found not one report which supported the opinion of Wundt (1910) and Heller (1895). But he found much evidence to support the views of psychologists such as Bürklen (1924), Mell (1900, 1910), Hocheisen (1892), Gigerl (1900), Zech (1918), Steinberg (1920), and others. In their introspective reports, blind readers say they can read with only one finger, even though they usually use both fingers; they are more at ease in reading using both--the reading finger returns easily and correctly between lines, and the other finger aids in perception and supplements and/or corrects the perception of the characters or words.

## Functions of Nonreading Finger

The following experiment was carried out to investigate the functions of the nonreading finger.

The apparatus (Figure 12) comprised the following. A tape (1, 1'), applied parallel to the horizontal drum edge, contained pairs of reading materials (A,A' and B,B') which had been embossed in braille. Parallel to the shaft of the drum and slightly above the tape, two paper covers (2,2') were also applied. A

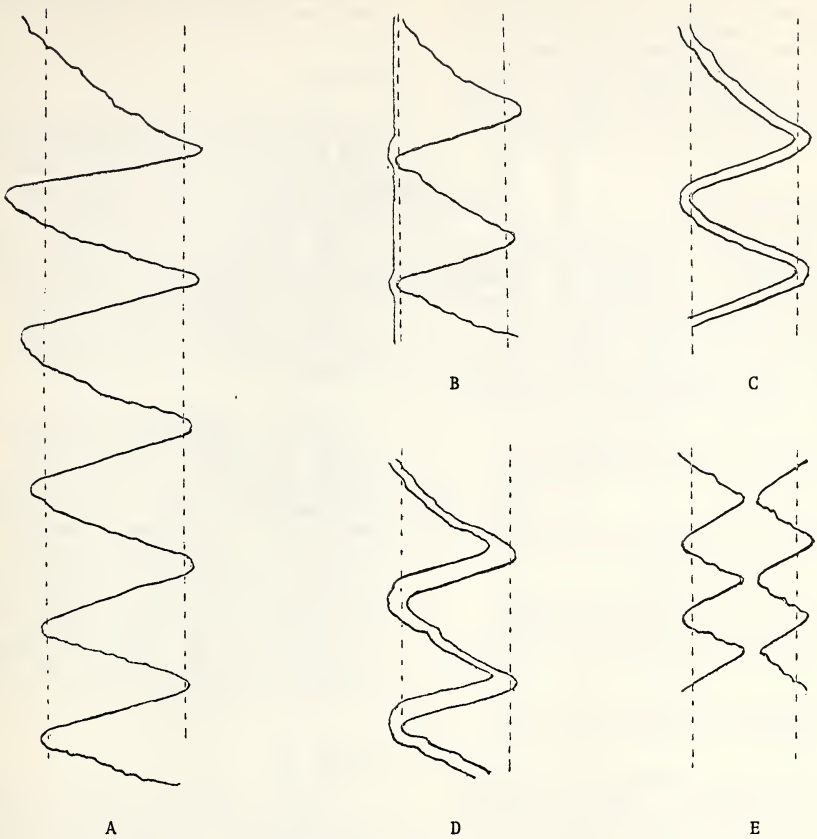


Figure 11. Records of Finger Movements During Braille Reading

A. One-handed Reading

B. Bimanual Reading--One Active Finger

C. Bimanual Reading--Parallel Movements

D. Bimanual Reading--Modified Parallel Movements

E. Bimanual Reading--Alternate Right and Left Active Fingers

small window (3), cut into each paper cover, allowed one braille character at a time to appear. The horizontal drum is so designed that when it rotates the reading material passes under the windows from right to left, the braille characters (A,A') appearing successively. The speed of rotation of the drum can be adjusted to suit.

## Reading Materials

The reading materials comprised 34 cm lengths of tape on which pairs of sentences were embossed in braille (A,A'; B,B'; and so on). The first sentence in each pair began at the beginning of the tape; the second began in the middle of the tape. All pairs were sentences of almost equal length. The relationship of first to second sentence was as follows:

1. Pair C/C': the first sentence was the same as the second sentence;

2. Pair D/D': the first sentence differed from the second by one braille cell;

3. Pair E/E': the first sentence was correctly embossed, while the second contained one damaged braille cell;

4. Pair F/F': the first sentence is completely different from the second.

Before the experiment began the drum was adjusted to turn at a speed of 15 cm/10 sec, a rate slightly lower than the equivalent rate of scanning in normal braille reading. The paper covers were so adjusted that the right finger read the braille character one cell ahead of the left finger; this is the same situation obtaining in normal braille reading.

Twelve boys and girls, all bimanual braille readers who were between 12 and 18 years of age, were the subjects. Each was asked to place his fingers so that one was on each of the windows in the paper covers; each finger was allowed to scan only what appeared in the window allotted to it; and the finger was not supposed to be removed from the window. Further, the subject was asked to read silently in his normal way, and that the experimenter would ask about the content of what was read later on.

## Results

For slightly less than normal reading speed, as in this experiment, only three subjects could read and report correctly Pair F/F', comprising totally different sentences (these subjects also reported all other pairs correctly). Of the remaining subjects, most reported only one of the pair correctly, plus some few letters or words of the second sentence. Some subjects reported feeling "something rough" on the tip of the second finger even when they reported the first sentence correctly.

As the experimenter increases the speed of rotation of the drum, legibility of the characters decreases gradually. At some point, neither finger can perceive the letters, only "something rough" against the finger. If the experimenter decreases the drum speed, however, legibility gradually increases to the point at which both fingers can perceive the letters perfectly. One infers that in the normal reading situation, readers adjust the speed of finger scanning and thus achieve efficient reading performance without conscious effort.

## Discussion

One may conclude that under some conditions two fingers can read identical sentences, slightly different sentences, a sentence without error and a sentence with some damaged cells, and two completely different sentences. These capabilities suggest the functions of recognition, correction, and supplementation--functions blind readers usually mention in their own introspective reporting. At least, it is certain that, except for these capabilities, readers would not recognize these functions of the second finger. Thus, in moving between lines of braille, the right finger can scan the remainder of the line being attended to while the left finger sweeps back toward the beginning of the next line. Even when a finger does not serve to identify any part of a

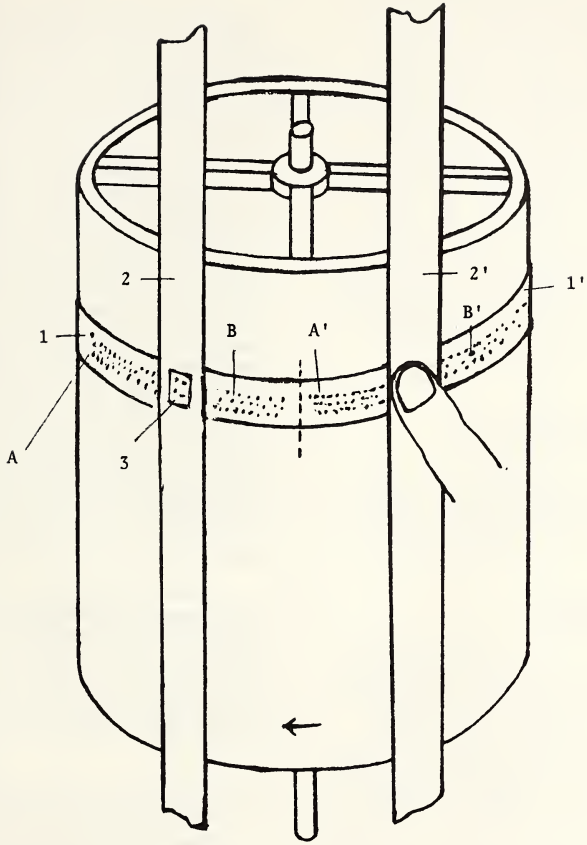


Figure 12. Apparatus for Controlled Presentation of Braille Reading Materials

sentence, but serves merely to identify "something rough"--as in the case in which the tips of the fingers are touching while reading--the confirmation seems to provide some reassurance of correct perception by the reading finger; the possibility that the reading finger may stray from the line of braille being read is reduced. The major disadvantage of braille reading (that a finger can encompass only one braille cell at a time) is then remedied by the ability of two fingers to scan two braille cells. The "nonreading" finger can be conceived of as the accompanying, assisting, or controlling finger; it is analogous to the "indirect vision" of visual reading. The sensation of "roughness," and the wider tactual field, of the bimanual braille reader permits reading in a relaxed manner: deviating from the line being read is alleviated by the accompanying function of the second finger to the first or reading finger.

## CHARACTERISTICS OF BIMANUAL BRAILLE READING

Taking into account the results of all the experiments cited, one can synthesize the several inferences into the following generalizations.

### Reading Functions and Readers' Attitudes

Examination of the recorded tactual lines shows some to have an extremely zigzag form, some very smooth, and some with moderate variations. The first two classes of lines are almost straight lines from beginning to end with but minor variation. The tactual lines of moderate irregularity are, on the whole, concave in shape.

Again, among the first two classes of lines, some show as many deflections as there are letters; others have very few variations. The former group is characteristic of the reading of a series of nonsense letters; or in the reading of beginners or poor readers. Such readers go through the material at an almost uniform velocity; the tactual lines are generally close to the vertical because they represent very slow reading (see Figure 13A). Readers in the other extreme group yield tactual lines with few oscillations, in an almost straight line, close to the horizontal. Such readers read very rapidly, with few scanning motions, uniform speed, and no reduction in reading time (see Figure 13C).

For average readers, the tactual lines are fairly smooth, have a certain amount of zigzag variation, vertical movement, and scanning motions (including tactual flutter orthogonal to the plane of the text). These lines are more or less concave (see Figure 13B, and Tables 2 and 3).

The concave shape of this group of tactual lines indicates reading that is slow at first, then increases in speed. This fact supports the notion that reading is not done by the mere addition of words one after the other, but through the integration of the constituent parts, i.e., words, phrases, clauses, and sentences. It indicates, further, that the more the reader reads, the deeper his understanding. When understanding is slight, as at the beginning of lines, and especially the beginning of first lines, the going is slow; but as the meaning of the sentence is understood more and more thoroughly, reading time decreases progressively. This interpretation is evident in the shape of the tactual lines.

Readers at this level of proficiency may be presumed to read not through the perception of braille cells one at a time, as in the case of beginners, but by appreciation of larger units with the aid of appropriate cues; a word is inferred from merely some significant cue-features of the word.

### Characteristics of Readers

The three types of readers evidence other distinguishing characteristics. In the first group--many scanning motions (up/down, zigzag)--when the tactual line trace shows nearly vertical straight lines, the reading style is oriented around the perception of every spatial form, i.e., every letter. But this is not "reading" in the strictest sense. The reader desires at first to perceive what forms there are, what letters there are--but not to catch and understand the meaning of the writer.

Table 2. Single-Handed Reading

| | Material G | | | | | | | | | | Material H | | | | | | | |
|---|---|---|---|---|---|---|---|---|---|---|---|---|---|---|---|---|---|---|
| Subjects | Hir. | Ito | Iida | Nito | Shi. | Yam. | Miy. | Hos. | Tak. | AVG. | Ito | Iida | Imao | Asa. | Mur. | Dozu | Nan. | AVG. |
| First Line | | | | | | | | | | | | | | | | | | |
| Reading Time* | 113 | 60 | 93 | 76 | 130 | 52 | 52 | 114 | 84 | 86 | 84 | 70 | 89 | 64 | 78 | 87 | 78 | 80 |
| No. of Oscillations | 37 | 21 | 40 | 13 | 42 | 14 | 11 | 44 | 28 | 28 | 26 | 23 | 38 | 15 | 19 | 45 | 18 | 26 |
| Between-Line Movement* | 31 | 20 | 36 | 25 | 35 | 18 | 32 | 26 | 36 | 29 | 19 | 23 | 32 | 25 | 28 | 27 | 39 | 28 |
| Assuring Movement* | 4 | 10 | 15 | 3 | 6 | 4 | 10 | 5 | 14 | 8 | 6 | 10 | 8 | 11 | 5 | 11 | 11 | 10 |
| Return Sweep* | 18 | 10 | 18 | 18 | 19 | 7 | 9 | 16 | 21 | 15 | 10 | 8 | 16 | 8 | 22 | 16 | 24 | 15 |
| Searching Movement* | 9 | 0 | 3 | 4 | 10 | 6 | 13 | 5 | 2 | 6 | 3 | 5 | 8 | 6 | 1 | 0 | 4 | 4 |
| Second Line | | | | | | | | | | | | | | | | | | |
| Reading Time* | 82 | 55 | 46 | 46 | 95 | 37 | 40 | 74 | 47 | 58 | 73 | 45 | 60 | 51 | 34 | 55 | 33 | 50 |
| No. of Oscillations | 25 | 17 | 20 | 6 | 25 | 5 | 13 | 34 | 12 | 17 | 25 | 16 | 32 | 9 | 7 | 32 | 6 | 18 |
| Between-Line Movement* | 29 | 25 | 30 | 23 | 31 | 19 | 29 | 23 | 29 | 28 | 17 | 20 | 28 | 22 | 24 | 25 | 22 | 23 |
| Third Line | | | | | | | | | | | | | | | | | | |
| Reading Time* | 75 | 55 | 52 | 48 | 93 | 40 | 42 | 68 | 51 | 58 | 65 | 52 | 58 | 50 | 42 | 50 | 40 | 51 |
| No. of Oscillations | 20 | 15 | 21 | 6 | 21 | 5 | 11 | 29 | 11 | 15 | 23 | 17 | 30 | 8 | 7 | 30 | 7 | 17 |
| Between-Line Movement* | 31 | 22 | 30 | 24 | 28 | 19 | 27 | 25 | 27 | 26 | 15 | 20 | 27 | 23 | 23 | 22 | 18 | 21 |
| Fourth Line | | | | | | | | | | | | | | | | | | |
| Reading Time* | 70 | 56 | 50 | 45 | 85 | 38 | 40 | 65 | 45 | 53 | 63 | 50 | 55 | 45 | 40 | 48 | 40 | 49 |
| No. of Oscillations | 16 | 12 | 18 | 5 | 17 | 4 | 8 | 25 | 8 | 12 | 20 | 18 | 23 | 8 | 7 | 27 | 6 | 16 |

*Tenths of a second

Table 3. Bimanual Reading

| Subjects | Material R | | | | | | | | | | | | | Material S | | | | | | | | |
|---|---|---|---|---|---|---|---|---|---|---|---|---|---|---|---|---|---|---|---|---|---|---|
| | Sh. | Su. | Nü. | No. | Seg | Ai. | In. | Ko. | Sa. | Ku. | Ka. | Sek | AVG | Ic. | Sh. | Su. | No. | Se. | Ai. | In. | Ko. | AVG |
| First Line | | | | | | | | | | | | | | | | | | | | | | |
| Reading Time* | 54 | 49 | 77 | 86 | 33 | 78 | 51 | 53 | 89 | 54 | 44 | 71 | 62 | 77 | 51 | 73 | 48 | 52 | 22 | 34 | 40 | 50 |
| No. of Oscillations | 10 | 8 | 14 | 9 | 2 | 4 | 6 | 6 | 11 | 6 | 3 | 5 | 7 | 17 | 10 | 2 | 4 | 4 | 0 | 0 | 0 | 5 |
| Between-Line Movement* | 32 | 25 | 38 | 15 | 22 | 28 | 13 | 21 | 26 | 20 | 28 | 25 | 25 | 20 | 17 | 11 | 24 | 32 | 33 | 20 | 40 | 22 |
| Assuring Movement* | 0 | 3 | 23 | 0 | 4 | 0 | 5 | 0 | 4 | 6 | 5 | 3 | 4 | 7 | 5 | 3 | 5 | 10 | 7 | 7 | 15 | 7 |
| Return Sweep* | 16 | 20 | 15 | 13 | 18 | 16 | 8 | 9 | 13 | 14 | 13 | 17 | 14 | 13 | 12 | 8 | 14 | 22 | 18 | 13 | 17 | 15 |
| Searching Movement* | 16 | 2 | 0 | 2 | 0 | 12 | 0 | 12 | 9 | 0 | 10 | 5 | 6 | 0 | 0 | 0 | 5 | 0 | 8 | 0 | 9 | 3 |
| Second Line | | | | | | | | | | | | | | | | | | | | | | |
| Reading Time* | 38 | 80 | 64 | 26 | 34 | 55 | 41 | 37 | 77 | 64 | 30 | 48 | 50 | 63 | 55 | 54 | 26 | 43 | 40 | 30 | 37 | 44 |
| No. of Oscillations | 10 | 8 | 12 | 0 | 0 | 3 | 2 | 3 | 20 | 5 | 1 | 0 | 5 | 8 | 9 | 0 | 0 | 3 | 0 | 0 | 1 | 3 |
| Between-Line Movement* | 28 | 25 | 32 | 16 | 20 | 24 | 14 | 18 | 27 | 22 | 25 | 22 | 23 | 20 | 15 | 12 | 22 | 32 | 30 | 20 | 32 | 23 |
| Third Line | | | | | | | | | | | | | | | | | | | | | | |
| Reading Time* | 32 | 65 | 61 | 30 | 30 | 52 | 38 | 42 | 72 | 60 | 32 | 45 | 44 | 60 | 50 | 48 | 30 | 42 | 42 | 32 | 36 | 43 |
| No. of Oscillations | 9 | 7 | 10 | 2 | 1 | 2 | 1 | 3 | 14 | 3 | 1 | 2 | 5 | 7 | 9 | 1 | 1 | 3 | 1 | 0 | 1 | 3 |
| Between-Line Movement* | 25 | 22 | 32 | 15 | 22 | 21 | 12 | 19 | 25 | 19 | 22 | 23 | 21 | 18 | 17 | 12 | 20 | 28 | 32 | 18 | 30 | 22 |
| Fourth Line | | | | | | | | | | | | | | | | | | | | | | |
| Reading Time* | 28 | 60 | 58 | 28 | 30 | 50 | 40 | 38 | 70 | 58 | 30 | 42 | 44 | 54 | 48 | 42 | 28 | 38 | 40 | 28 | 32 | 39 |
| No. of Oscillations | 7 | 7 | 9 | 2 | 1 | 2 | 2 | 3 | 12 | 3 | 1 | 1 | 4 | 7 | 8 | 0 | 1 | 2 | 0 | 0 | 1 | 2 |

*Tenths of a second

After apprehending the letters, the reader reflects on and understands the meaning of the sentence. In this kind of reading, the scanning motions are almost equal to the number of braille characters in the reading text. (Even skilled readers will produce as many scanning motions as a beginner when reading a series of nonsense characters.) The reading of meaningful sentences by beginners or poor readers is functionally equivalent to the reading of nonsense words by the skilled braille reader. And the tactual line tracings show the reading process to be merely a combination of homogeneous factors; we find only repeated perceptions of homogeneous objects. As his finger moves, the reader reads not a sentence, but is perceiving forms or characters one after another. If the line trace is examined closely, one sees a combination of homogeneous up/down movements or scanning motions; and the distribution of time intervals over a number of characters is quite uniform (see Figure 13A).

From a functional point of view, the forms or letters in the line are not differentiated as words or phrases, but as a combined series of homogeneous signs or forms; no part of the sentence is integrated into word blocks, still less into a total meaning. In such reading it is quite natural that the tactual line tracings are found on a straight line with varying degrees of oscillation. The closeness of the tactual lines to the vertical indicates that the perception of signs or letters take place very slowly, one after the other, and the sum of these repeated perceptions gives this line-shape (see Figure 13A).

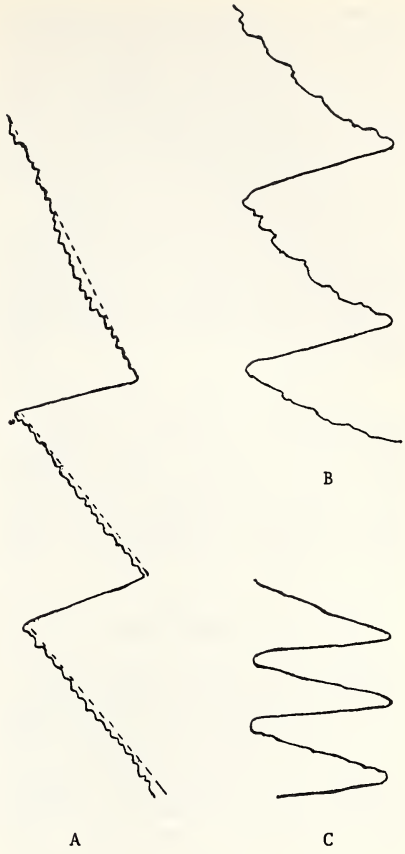


Figure 13. Records of Finger Movements by Slow (A), Average (B), and High-Speed (C) Readers

Average Readers

The tactual line tracings of average readers show a generally concave shape. Some up/down or scanning movements are in evidence, but fewer than the number of braille characters on the line of braille (see Figure 13B). One infers that this kind of reading is a process characterized by an organization of heterogeneous and homogeneous factors into a totality, through differentiation and integration of meaning. At this stage of reading, our data suggest clearly that the attitude of the reader is

directed rather more toward understanding the meaning of the sentence. Though the letters are hardly organized at first, as the reader proceeds the characters become more and more differentiated into words, phrases, or clauses; at the same time, they are integrated into a totality of meaning. It is interesting that the amplitude of the concavity decreases as a function of total reading time. This indicates that the reader understands the content of the sentences more and more completely; the tactual lines become hardly concave at all, but approach horizontal (see Figures 11A and 13C); the scanning motions also almost disappear.

The tactual line tracings of such readers show fewer oscillations than the number of braille characters in the line of braille; for example, in a line of 32 braille cells, there may be as few as six, or at most 12, scanning motions. This suggests that average readers may read through a whole line of braille with but a few cues to the content.

### Orientation to Understanding

Such readers seem oriented to understanding combined with perception, with more time spent on meaning and less time spent on perception than the beginner or unskilled reader will show. The perceptual function recedes into the background, while the effort of understanding occupies the foreground of attention. A few braille characters from a line is sufficient for these readers to read the whole line, with the aid of the surrounding context. Still, we do not know yet what braille characters will elicit the reading of whole words, phrases, and lines.

The tactual lines of very good readers are very smooth with hardly any oscillations. They make scarcely any up and down movements or flutterings. They read sentences with hardly any movements other than a smooth displacement from left to right. Also, their tactual lines are close to the horizontal. This shows that such readers read with the finger sliding very smoothly and rapidly along the braille lines (Tables 2 and 3).

These readers attend only to understanding the meaning of a sentence. The function of understanding completely occupies the foreground of their consciousness, while that of perception recedes entirely into the background. It seems that they perceive a group of braille cells as a totality, a *Gestalt*, which is systematized successively in time. We call this "reading by total word form."

How do they read average, general material? When we examine the tactual lines closely, we discover barely perceptible deflections near the beginning of words, in addition to some oscillations corresponding with some up and down movements and flutter. It seems that the finger flutters over one or a few points near the word intervals, but passes smoothly over other parts of words, drawing smooth lines. This indicates that in such readings, they may be supposed to perceive words with the aid of a few cues or dominating letters. We might call this "reading by dominating letters."

Reading with up and down movement or fluttering at every character we could call "letter-by-letter reading."

## RETURN MOVEMENTS BETWEEN BRAILLE LINES

### One-Handed Reading

Examination of all the tactual lines obtained from single-handed reading reveals the following facts:

In all cases the reading finger moves out beyond both ends of the braille line. Often, there are "unnecessary" movements outside both ends of the braille lines.

The finger, which has no visual field, can perceive the braille only upon touching it. Before the finger touches it, various kinds of movements occur. These movements near the beginning of the braille line may be called "searching movements." The finger also makes various movements when it comes to the end of the line. Here the finger continues

moving to check that the line is finished and there is nothing more to touch. These may be called "assuring movements." These movements are indispensable to the blind. The tactual lines of one-handed reading also show that as more braille lines are read in succession, there is less time devoted to return movements and fewer needless movements for both "searching" and "assuring" are made. (See Figure 11A and Table 2.)

When the sentences are easy and normal, and there is nothing strange, difficult, indistinct, or incorrect in the sentences, the finger gradually comes to make habitual motor movements. So long as no such problems appear, the habitual motor movements last until the end of the page. In habitual motor movements, the time and space for "assuring" and "searching" at the ends of the line are generally reduced. The movements of the reading finger become regular and rhythmical, until they become quite mechanical. During these movements the capacity for orientation and localization of the reading finger is quite stable. It is often found that after long, continued repetitions of habitual motor movements, the time for both assuring and searching amounts to almost nothing (Table 2).

But the habitual motor movements are a short-lived habit, for as soon as some of the above-mentioned difficulties occur in the sentence, or the reader is distracted by being called or by his own thoughts, the habitual motor movements will be disrupted. The movements are very unstable. The author is of the belief that the accompaniment of the other finger eliminates this problem (Figure 11A and Table 2).

## Bimanual Reading

The following four types of adaptation are found on examination of the tactual lines of bimanual reading:

Type 1. Though the reader uses both fingers, only the right finger reads. The left remains near the beginning of the next braille line awaiting the return of the right finger. When the right finger has finished reading and ascertained the end of the line, it returns quickly to the waiting left finger. Near the beginning of the next line the right and left fingers collide. From here only the right runs forward, while the left remains and waits for the right. As soon as the right finger has read the line and "assured" the end of it, it repeats the above movements. (See Figure 11B and Table 3.)

Type 2. In this kind of movement between lines, both tactual lines are completely parallel from beginning to end. They are parallel not only during reading but also in return movements. The right and left tactual lines are therefore quite identical in shape (Figure 11C). During reading the fingers move with tips lightly pressed together (Table 3).

Type 3. From the beginning of each line until nearly the end both right and left fingers move with tips lightly pressed together. Near the end of the line, they part. One of the two functions as a reading finger, while the other is the accompanying finger. As the right reads the rest of the line, the left returns quickly, sweeping approximately to the beginning of the next line. There it waits for the return of the right. Having finished reading the line, and ascertained its end, the right finger returns very rapidly to the left finger and collides with it. Here the right and left fingers start again on the next line and repeat the above movements. Sometimes the left finger starts somewhat forward before its collision with the right. (See Figure 11D and Table 3.)

In this type of return movement, with the right as the reading finger and the left the accompanying finger, the return movements will be made without exchanging the functions of the fingers. But when the left finger is reading and the right is accompanying, their roles must be exchanged toward the end of the line (Table 3).

Type 4. The left finger reads from the beginning of the line, while the right finger returns from the end of the braille line, the fingers meeting in the middle of the same line. At the point where they meet, the left hand gives up the role of reading to the right which then reads the remaining right half of the line.

Meanwhile, the left returns to the beginning of the next line. The left then reads from the beginning of that line, while the right returns from the end of the previous line, both again meeting in the middle of the line. These movements are repeated (Figure 11E). The author considers that in this method the movements are symmetric and are very easy for the reader (Table 3).

### The Accompanying Finger

The role of the accompanying finger is found to be very important, especially in the return movements between lines. We have already found through experiments that bimanual reading of braille is far more effective than one-handed reading, because the accompanying finger relieves the reading finger of certain burdens. The use of the accompanying finger gives a feeling of ease to the readers, for the reading finger, lacking anything similar to indirect vision (as found in visual reading), can be helped greatly by the accompanying finger. In following the reading lines, the accompanying finger expands the tactual field of the reading finger, reduces the chance of missing a line.

In Type 3 bimanual reading, the reading finger is helped by the accompanying finger, and the orientation and localization of the reading finger between lines is also assisted. In Type 3 reading both of the possible functions of the accompanying finger are utilized.

The two simultaneous tasks, the right finger reading the rest of the line and the return sweep by the left to find the beginning of the next line, saves much time otherwise lost in the orientation of the single finger. Performance of the two tasks at the same time is not necessarily difficult because the reading task completed by the right finger is a mental one while the return sweep to the beginning of the next line by the left (after considerable practice) becomes merely mechanical; sighted persons, for example, can read a difficult book while walking. Mere collision of the reader's fingertips is very useful, since it serves to eliminate the over- and under-estimations of localization by the right finger. In Type 3 reading, also, the mutual assistance of the two fingers is realized almost to the end of the line.

It is thus evident that Type 3 reading is more efficient than any of the others. On the basis of these experiments the author would recommend that teachers of the blind encourage the use of such a technique when teaching braille reading.

## DOMINANT AND SUBORDINATE LETTERS

From the tactual lines of general, average readings, we found that such readers may read the whole line (32 letters) merely through cues provided by several of the braille characters. These may be sufficient to read the whole line, aided by the surrounding context. But we were still ignorant about which braille characters are necessary for such reading and which are superfluous. The following experiment was carried out to elucidate this question.

### The Apparatus

The apparatus illustrated in Figure 12 was again used, but the drum was enlarged so that longer tapes of reading material could be applied. On the drum of an electric horizontal kymograph, a tape was applied with reading material. Over the drum there is a window large enough for the finger to read the materials. The drum revolves from right to left at a uniform speed so that the reading materials appear from right to left. They glide by somewhat faster than the average finger-movement speed in reading.

### The Reading Materials

From the words written in braille, various braille cells were omitted. Using the symbol "+" to indicate the omitted braille cells, we had the following varieties of reading material: (a) initial braille cell omitted from a word: +0000; (b) second cell omitted: 0+000; (c) first and second cell omitted: ++000; (d) last two cells omitted: 000++; and (e) characteristic groups of cells

omitted: 00+00, +00++, 000++, ++00+. (Such groups would be for instance, *gh, ing, our, ssed* . . . in English or *sch, schaft, keit, heit, emp, ent, ver, zer, ch, chen, tsch*. . . in German. The structure of the Japanese language is quite different from European languages. The examples above only indicate the type of omissions made.)

Procedure

The subjects were instructed to silently read the words through the windows of the apparatus as the drum revolved. At first no braille appears, only the smooth, blank surface. Immediately before the braille characters appear, the experimenter gives the signal "Read." After the experiment, the subjects reported to the experimenter what they had read.

Results

When one or two braille cells were omitted from the end of a word, the subjects could read almost perfectly. From this fact one can conclude that the final braille cell or two of a word are subordinate or unimportant in reading.

When the initial or the first few braille cells are removed from a word, the subjects can hardly read it. From this we may conclude that the first one or more braille cells are indispensable for reading. They are dominant letters.

When some characteristic groups of braille cells are found in a sentence, the subjects cannot read the sentence when they are removed. The author considers these groups as dominant letters.

On the basis of these experiments the author concludes the following: the initial one or more cells and some characteristic groups of cells in words are dominant, while other braille cells, especially the last one or two cells, are subordinate or insignificant. We can thus understand the reason for some oscillations at the word intervals or at the beginning of words, and the smooth lines over the last half of words in the reading of normal average readers.

## FINGER PRESSURE DURING BRAILLE READING

The author has already studied the left-right and forward-back dimensions of the finger movements during braille reading. The movements in the third dimension (up-down), expressed in terms of pressure, therefore, remain to be studied and described.

The Experiment

The apparatus (Figure 14) was devised by the author. The reading material (1) is placed on the horizontal plate (2) of the pressure recorder. When the subject reads the braille, the reading finger presses the horizontal plate down, and lifts the recording stylus (3) up. The recording stylus touches the black-smoked paper (4) which is applied on the drum (5) of a kymograph. The drum revolves quietly with uniform speed. The recording stylus moves up and down, accordingly, as the reading finger presses the reading material with stronger or weaker force. The stylus marks the white pressure curve (6) on the black-smoked paper.

The same method was employed as in all previous experiments for recording movements in horizontal planes, and the same reading materials were used. The subjects, 165 blind pupils of the Tokyo School for the Blind, were instructed to read in their usual, normal manner and in silence.

Results

Generally speaking, the data on pressure correspond with the findings for the horizontal plane. In other words, zigzag, entangled, or complicated movements, or flutter of the reading finger, found in the previous study, correspond almost exactly with its pressure movements.

When we examine all the pressure records, and compare them with both horizontal and vertical movements, we find a nice correspondence among them. In the pressure records there are also traces showing severe oscillations (Figure 15-A, B, C), some with considerable variations (Figure 15-D), and those with hardly any

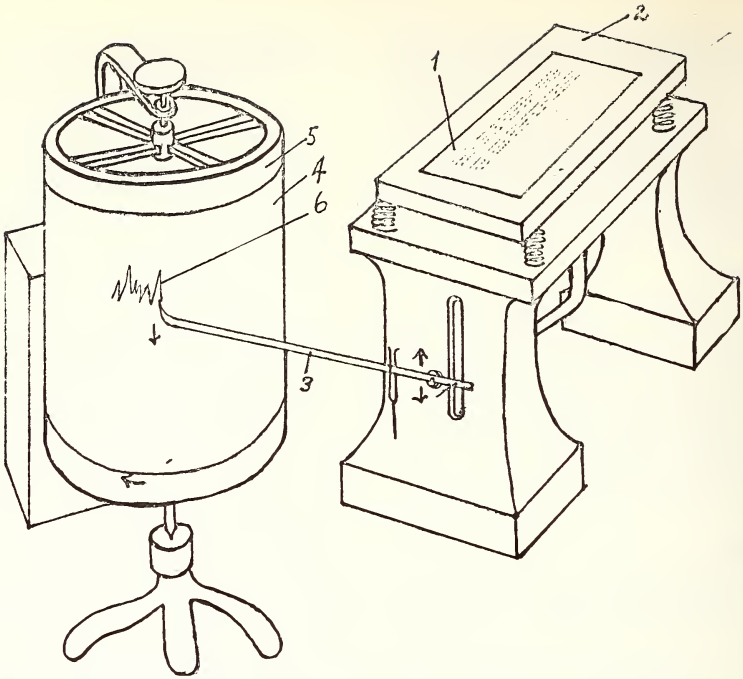


Figure 14. Apparatus for Recording Finger Pressure During Braille Reading

oscillations--only a few fluttering movements or smoothly straight lines (Figure 15-E, F).

It was found, further, that when the subject made movements or fluttered his finger to an abnormal extent at certain points on the line of the reading material, his finger pressed abnormally on just the same parts of the line.

We know that when the blind person reads a nonsense series of braille, his tactual line contains as many zigzag movements or flutters as there are braille characters in the line. In the reading of the series of nonsense words in braille, they show also as many heavy pressure movements or flutters as there are braille characters. The readings of pressure correspond with the tracings in the horizontal plane (Figure 15-A, B, C).

Just as in the case of experiments recording the horizontal movements, so in these experiments beginners or poor readers displayed letter-by-letter movements or flutters also made letter-by-letter pressures for every letter. They also do not indicate concern with the meaning of the sentence or the intention of the writer, but with the mere perception of every spatial form of the braille cells, or of each letter (Figure 15-A, B, C).

Expert Readers

As in the experiments for horizontal movements, so in these experiments, good readers of high intelligence, rich knowledge, and experience make smooth tactual lines of even pressure, generally like straight lines. These expert readers, who make few perceptible movements or flutter and who move their fingers smoothly and quietly, also move their fingers with almost uniform pressure over all the cells of the braille line (Figure 15-F).

Such readers are concerned with the meaning of the sentence, and not with the perception of individual braille cells. They aim at understanding the intention of the writer and so read the sentences with whole

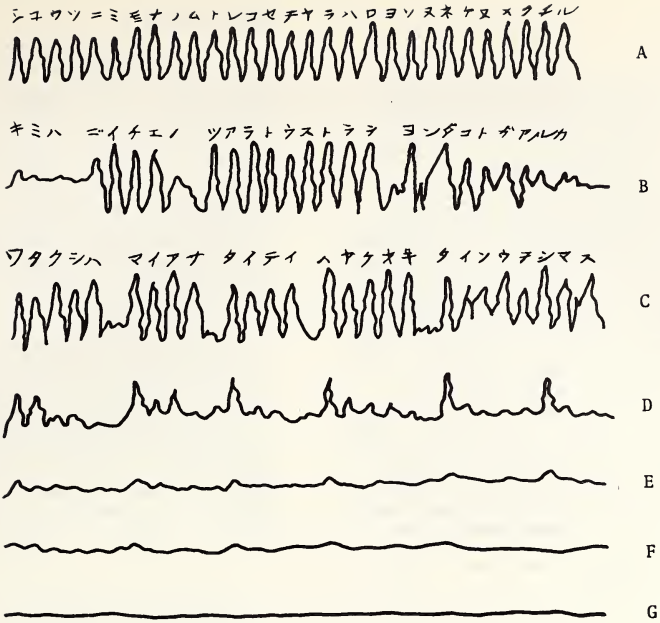


Figure 15. Records of Finger Pressure

A. Nonsense series of braille letters (high pressure at every braille cell by all readers; letter-by-letter reading)

B. Easy sentence with foreign words, normal readers (high pressure at every braille cell of the unfamiliar foreign words; letter-by-letter reading)

C. Easy sentence, unpracticed reader (high pressure at every braille cell)

D. Easy sentence, average reader (high pressure at some braille cells; dominant-letter reading)

E. Easy sentence, better reader (slight increase in pressure at some braille cells; dominant-letter reading)

F. Easy sentence, better reader (very slight increase in pressure at some braille cells; dominant-letter reading)

G. Easy sentence, very good reader (almost uniform low pressure on the whole line; total-word reading)

words, not letter-by-letter (Figure 15-F).

Between the tactual lines with many oscillating movements or flutter and those smooth lines with a few hardly perceptible movements, we found those with more or less oscillating movements or flutter. Similarly, between the two kinds of tactual pressure lines (those with many changing pressures and those with uniform pressure) we have those with a few or several wavering pressures (Figure 15-D, E). Such tactual pressure lines are usually recorded from general, average readers. In addition, these few wavering pressures are mostly found over word intervals or at the beginning of words. It would seem that these persons read neither letter-by-letter nor by whole words in context. Without reading every braille cell of each word, they read words through perception of some of the braille characters which compose them, using these as cues. These average readers, therefore, read words or sentences by means of dominant or determining letters.

## Conclusions

The experiments on pressure variations during braille reading demonstrate that when readers make zigzag, entangled, or fluttering movements on the braille page, they are probably at the same time exerting changing amounts of force. When they make hardly any perceptible or fluttering movements on the paper, they are at the same time applying uniform pressure to the paper. When they make a few movements or flutter, they are at the same time exerting corresponding forces on the paper.

Though pressures are not directly visible during the reading of a horizontal page of braille, horizontal finger movements or flutter are always accompanied by continual changes in vertical movements, depending on the reader's mental functions. The mental functions underlying the horizontal finger movements are reflected also in the pressures exerted during braille reading.

# PART TWO. PRIOR EXPERIMENTAL RESEARCH ON EYE MOVEMENTS DURING READING

To read something, we perceive letters, words, and sentences visually. Visual perception cannot be separated from reading. We need to know about the function of the eyes, especially their movements during reading. Reading is both a psychological and a physiological process; it is a total phenomenon experienced in a psychophysical field. Here we will concern ourselves with the physiological mechanisms in reading, in particular with eye movements during reading.

## EARLY OBSERVATION OF EYE MOVEMENT

How do the eyes move during reading? The pioneers in the study of this problem are Volkmann and Lamansky who measured the speed of eye movements during reading (Lamansky, 1869). In 1878, Javal (1879, 1905) contrived the breakthrough mirror method of observing eye movements during reading. He placed a mirror in front of the reading subject, and the experimenter, sitting beside him, observed his eye movements in the mirror. This method is pretty primitive, but the experimenter obtained results quite close to those obtained later. For instance, the notion that the eyeball revolves smoothly during reading was first disproved in his experiment. Javal also discovered that the fixation point of the eye does not move smoothly from left to right on the line.

Later, Landolt (1891) and Erdmann and Dodge (1898, 1900) used almost the same observation methods with considerable success. H. Tanaka (1920), in Japan, also observed the eye movements of readers, using a telescope six feet distant from them. During the observation he marked the time lines, using a kymograph and working Jacquet's chronometer; at every pause he keyed and measured the number of pauses.

These methods only include the observation of eye movements, but not the direct recording of them. In these methods no unnatural restraint is imposed upon the eyes; the objective facts are described through the experimenter's subjective measurements. Although rough descriptions of the facts may be possible, exact data can never be obtained in this way, and still less can the measurement of the time involved in eye movements be made. These are real shortcomings of early methods and apparatus, but the main aspects of eye movements during reading were revealed nonetheless.

### Results

This research did make clear that the eyeball does not revolve, gazing at each letter in succession from left to right, but pauses and moves alternately. Generally, when the reading material is easy, the number of pauses decreases; when difficult, it increases. Perception occurs during pauses, not during movements. While the eyes pause, the eyeballs stop rotation, and gaze at and perceive letters and words; while they rotate, they perceive nothing. The fixation pauses are connected with flying movements in lines. During pauses, the letters or words are simultaneously perceived. At any one pause, generally, seven letters are perceived simultaneously.

### Direct Recording of Movements

Through this work, the catalog of eye movements during reading was almost clarified. But recording methods succeeded these imperfect earlier methods.

Ahrens (1891) first developed such a method. He adhered a very tiny and light cup-form with a hole

in the middle to the subject's cornea, allowing it to move with the movement of the eyeball. He recorded the movements of the cup upon a sheet of smoked paper applied over the drum of a kymograph. This method became later the basis of Huey's recording method. Judd, McAllister, and Steele (1905) applied a little white paint to the lower part of the cornea and filmed the eye movements, but synchronizing each frame of the film with each momentary movement was exceedingly difficult, and this method was barely feasible in practice.

Huey (1908) first succeeded in recording eye movements during reading. He kept the upper and lower lids open with a lid holder, preventing blinking; he immobilized the head with a restraint; and he used cocaine drops as an anesthetic. Visual perception remained unaffected. A very tiny and light (1/7 gram) cup of plaster of paris is adhered to the cornea. Its movements are transmitted to a horizontal rod which moves a long marker at its root near a fulcrum. The amplitude of the movements of the marker tip is thereby much enlarged. The tip traces on a sheet of smoked paper rolled upon the drum of the kymograph. Hence, the eye movements are recorded in greatly enlarged form. By the use of an interrupter, sparks are made every millisecond through the contact of the marker with the drum. At every spark, black powder is blown off and white points are made on the smoked paper (see Figures 16 and 17).

## Recording Pause-Time

In Figure 17, a small white point shows the unit of time, one millisecond. Big points are actually groups of points, which indicate multiples of .001 second, i.e. several milliseconds. The groups of white points indicate that the eye paused.

The fact that six lines are shorter than the preceding and following lines indicates that the eye did not gaze at the very end of the line, but perceived the last parts without pauses. The few points on the smooth straight line from the end of a line to the next line indicates the very rapid movements between lines. The gaze point flies from almost the last part of the line to nearly the beginning of the next. Moreover, the eye never pauses in any of the return movements.

By this method, white points aggregate during pauses and pause-time can barely be measured. The fact that white points are not gathered on the same spot, but in a certain limited area, indicates that the pauses are not complete cessations of movement, but relative pauses, in which the eyeball vibrates to some degree. The difficulties in measuring pause-time is a serious defect of this method, yet the outline of pauses and movements are well indicated. The weight and restraint upon the eye, however, are a still greater defect of the method, for restriction of the freedom of the eye may distort its natural movement.

## Modern Modifications

The author, mindful of these considerations, modified the method and apparatus. The rotation speed of the kymograph drum was increased, the use of sparks was replaced by Jacquet's chronometer, and time lines were recorded on both sides of the smoked paper. Some subjects with artificial, mobile eyes were used. Thus, it was possible to measure the pause-time, as will be described in detail later. After this method was evolved, the photographic method came into use. With some variations, Erdmann and Dodge (1898, 1900) and Gray (1917) employed this method; the method of the former will be described first.

The subject's head is immobilized, and a parallel beam is projected through lenses. It is filtered through a blue glass, and is projected on the surface of the reading eye. The projected light beam is reflected there, and moves with every movement of the eye during reading. It is caught on a photographic film plate sliding smoothly downwards with uniform speed (see Figure 18). In this apparatus, the photographic plate slides downward and the numbers 1, 2, 3, 4. . . show the order of the pauses in Figure 19. When the subject reads many lines, the records are as shown in Figure 20.

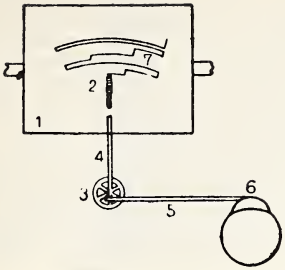


Figure 16. Apparatus for Mechanically Recording Eye Movement During Reading

Figure 17. Records of Eye Movements Using Mechanical Method

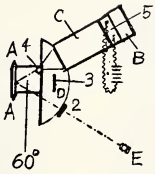


Figure 18. Apparatus for Photographically Recording Eye Movement During Reading (After Dodge)

AA Head Restraint
B Camera
C Camera Obscura
D Perimeter
E Light
2 Blue Glass
3 Book Stand
4 Lens of Camera
5 Motor Drive for Photographic Material

Gray's photographic method is almost the same: an arc light source is used; a parallel beam is produced through several lenses; it is narrowed by passing through a small guide and timed by a tuning fork at 1/25 to 1/50 second. Then it passes through a special glass, and a very special beam is produced, chemically effective, though weak physiologically. Finally, this special beam is read on to a smoothly passing film at uniform speed. With this apparatus eye movements are drawn as in Figure 20. Figure 21 is the photographic record. The subject read four lines. In all lines five pauses are found. The eye movements are regularly and rhythmically habitualized.

## FINDINGS ON EYE MOVEMENTS

The pioneers of the field have thus contrived the methods and apparatus to study eye movements during reading and the general pattern is now known. Since the invention of a photographic apparatus, researchers have generally come to utilize this method, though more or less improved or modified. In the United States, in particular, the ophthalmograph is used for recording eye movements during reading.

In briefly describing eye movements during reading, it may be said that the fixation point does not move smoothly along lines in correspondence with the mental process of reading. Pauses and movements are combined alternately with each other. During pauses letters and words are perceived, while during movements nothing is perceived. Pauses require some duration, while movements are exceedingly swift. Pauses are located almost on lines, but have nothing to do with the meaning, syntax, or grammar of the sentences. Pauses are entirely mechanically located. Long pauses are combined with extremely rapid movements. Pauses increase in number and duration when the reading materials are difficult or with poor readers, while they decrease when the reading materials are easy and the readers are good.

### Pauses

Why do the eyes pause and move alternately? In the retina there are two kinds of cells; cone cells and rod cells. The former discriminate colors, while the latter are most important under low illumination. The part where many cone cells are gathered is called the *macula lutea*, in the center of which there is a tiny part called the *fovea centralis*. When the retinal image of an object falls upon the *fovea* we can see it clearly and distinctly. When it falls far from the *fovea centralis* the image is not clear and distinct. In such cases, the eyeball revolves reflexively so that the image may fall upon the *fovea centralis* and become clear and distinct. This is the basis for eye movement.

During movements the eye cannot perceive and adjust the amplitude of movement. If the movement is too large, it pauses at an approximate point, and repeated corrective movements of the eyeball are made. These corrective movements can be reduced through exercise, but cannot be absolutely eliminated even through extensive practice.

Correction movements cannot be reproduced in absolutely the same form. The accuracy of eye movements varies greatly from one individual to another. Generally speaking, eye movements undershooting of the right point are found more often than those overshooting the right point.

### Convergence

Eyeball movements are coordinated with one another. Convergence is a reflexive movement, so that the image of an object may be focused upon the corresponding points of respective retinas. Judd (1907) and Dodge (1900, 1907) state that, before convergence is complete, it is sometimes disturbed by other minute, corrective movements. For this reason convergence requires more time than corrective movement. This enables us to understand the physiology of eye movements during reading.

At the beginning of a line, a considerable pause occurs. Here some letters or words are perceived--a few words at most. Those words, of which images are upon or near the *fovea centralis*, are clear and distinct, while those farther from it are indistinct--the farther the images, the

Figure 19. Photographic Record of Eye Pauses During Reading

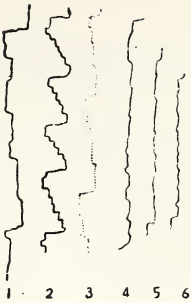


Figure 20. Photographic Records of Eye Pauses During Prolonged Reading

1. Normal Eye
2. Regular Pauses
3. Reading Time Shown by Cut Line
4. Slow Reading
5-6. Slow and Irregular Reading

Figure 21. Photographic Record of Eye Pauses During Reading (After Gray)

more obscure they are. In reality, therefore, when an individual reads near the beginning of a line, he can hardly see the last part of the line, though it is not absolutely invisible, especially when the line is long.

By the same token, the words perceived at a pause are limited to a certain area, and the words out of this area to the right on the line are generally obscure. The reader must get these parts onto the *fovea centralis*. The eyes must be converged, aiming at some succeeding point. Here, a reflexive movement of rotation of the eye occurs. This is the eye movement we record.

### Other Movements

It is supposed that before convergence is completed some other sympathetic movements occur. Judd and Buswell (1922) explain that the eyeball revolves laterally in sympathy and adjusts for a moment until the eyes reach the proper convergence position. Schmidt (1917) states, further, that during the flying movement from one pause to the next, divergence occurs. That is why the eye never rests, but moves constantly with small vibrations.

After repetition of these pauses and movements, return movements are made from the last pause of the line to the first pause of the next. In every line the first pause is generally longer. Pauses mean gazing between two movements, the preceding and the following. These are nothing but the residues of movements with vibration in which the reader strives to perceive the object clearly and distinctly by centering its image on the *fovea centralis*. During pauses in reading, the former perception must disappear before a new one can be produced. About 100 milliseconds is the time estimated to be required for this process. Pauses in nonreading visual behavior are much shorter than those in reading.

Dearborn (1906, 1936) states that some readers' pauses are very solid and stable, while others are unfixed and labile. In some cases he found pauses which were so labile and trembling that they could not be distinguished from movements. Dodge (1900) also states that in gazing the eye generally wavers and trembles. But most researchers are of the opinion that the wavering and tremor of the eyes during gazing are not so severe that they disturb perception or attention.

## FIXATION PAUSES

There are many interesting problems about fixation pauses. Number of pauses, length of pauses, location of pauses, the reading materials, and their interrelationships are factors of particular interest.

Landolt (1891) states that 1.55 words can be read at a pause, and that there must be 6.55 pauses in a 90 mm. line. Erdmann and Dodge (1898) had subjects read *Visual Perception* by Helmholtz, and found 5.7 pauses per line on the average (line length, 12.2 cm.); and 4.0 pauses average per line in an essay by John Locke (line length, 8.3 cm.). Huey (1908) had his subjects read an issue of the *American Journal of Psychology*, and found an average of 4.75 pauses (line length, 9.8 cm.), and 3.5 pauses for newspapers (line length, 5.2 cm.) and magazines (line length, 6.05 cm.). Table 4 shows the relation of the pause numbers with the line length. In this table, subjects, reading materials, and line length all vary, and may not be carelessly compared with each other; but it suggests the general pattern of their relation.

### Number and Line Length

What is the relation between the number of pauses and line length? When the line length is doubled, this does not necessarily result in twice the number of pauses; when it is halved the pause number does not decrease by half. When Dearborn (1936), who had read with 5.3 pauses per line, read lines of double length he found that the pauses per line were only 7.45. When we convert the results into legibility per pause, we find that legibility suddenly rose in the latter case. From this fact we can see that with longer lines the legibility rises. But there is some limit within which this principle may be

Table 4. Relationship of Number of Pauses to Line Length

| Researcher | Subject | Reading Material | Length of Line | Number of Pauses | | Number of Pauses Per 100 Cm. |
|---|---|---|---|---|---|---|
| Erdmann & Dodge | D | *Visual Perception*, by Helmholtz | 12.2 | 5.68 | 5.7 | 46.7 |
| | E | | 12.2 | 5.73 | | |
| Huey | HW | *American Journal of Psychology* | 9.8 | 4.8 | 4.75 | 48.4 |
| | HO | | 9.8 | 4.5 | | |
| Erdmann & Dodge | D | Essay by John Locke | 8.3 | 4.0 | | 48.2 |
| | X | *Cosmopolitan* | 6.05 | 3.6 | | 59.5 |
| | Y | Newspaper | 5.2 | 3.8 | 3.6 | 69.2 |
| | Z | | 5.2 | 3.4 | | |
| H. Tanaka | N | Advertisement | 10.7 | 5.0 | 5.3 | 49.5 |
| | O | | 10.7 | 5.7 | | |
| | N | Advertisement | 9.5 | 5.0 | 5.2 | 54.7 |
| | O | | 9.5 | 5.3 | | |

valid. In fact, Huey (1908) states that the shorter the lines, the higher the legibility per line climbs. In this, individual differences appear to be prominent. We cannot infer the number of pauses from line length. Other conditions should be considered also, such as pause time, difficulty of reading materials, reader's attitude, print, and various other conditions.

## Number and Duration

It has been discovered that the number of pauses during reading is smaller among upper grade pupils than in lower grade pupils. Further, the number of pauses during silent reading is smaller than in reading aloud. Gray (1917) made a comparative study of the number of pauses made by experienced and inexperienced readers; upper grade pupils made fewer pauses than lower grade ones (average number of pauses--fourth grade, 13.3; fifth, 9.3; sixth, 9.0; seventh, 10.6; high school, 7.8; college, 8.8). But, he states, the number of pauses is not necessarily correlated with the speed of reading, and fast readers do not always read with few pauses per line. Buswell (1920) conducted developmental research on number of pauses, pause-time, and regressive movements during reading. The results are shown in Table 5. Dearborn (1906) says that the number of pauses in a line is in inverse proportion to the pause duration, but it is hard to find any definite ground for this conclusion. We find subjects showing many, and long, pauses; and those with few, and short, pauses--though it is true that we frequently also find those showing many but short, pauses or those with few, but long ones. Vernon (1931) distinguishes two main types of readers, based on her own experiments. There are those who read with short, but numerous, irregular pauses, for whom

Table 5. Results of Buswell's Developmental Research

| Year/Grade | Number of Pauses per Line | Pause-Time (milli-secs.) | Regressive Movement |
|---|---|---|---|
| Primary | | | |
| I-B | 18.6 | 660 | 5.1 |
| I-A | 15.5 | 432 | 4.0 |
| II | 10.7 | 364 | 2.3 |
| III | 8.9 | 316 | 1.8 |
| IV | 7.3 | 263 | 1.4 |
| V | 6.9 | 252 | 1.3 |
| VI | 7.3 | 236 | 1.6 |
| VII | 6.8 | 240 | 1.5 |
| Secondary | | | |
| I | 7.2 | 244 | 1.0 |
| II | 5.8 | 248 | 0.7 |
| III | 5.5 | 224 | 0.7 |
| IV | 6.4 | 248 | 0.7 |
| University | 5.9 | 252 | 0.5 |

the number of pauses varies; and those who read with long, but few, irregular pauses, and among whom the number of pauses remains largely unvarying.

Owing to the prominence of individual difference, it is hard to draw firm conclusions. But, in general, it may be said without serious error that in comparison with inexperienced, poor readers, expert readers read either with few though rather long pauses, located almost uniformly in lines, or with short, numerous pauses, distributed almost uniformly in lines. Further, regressive movements are seldom found in the reading of the expert.

Pause Duration

It is extremely difficult to record pause length objectively, for eye movements are minute, and the eyes are exceedingly sensitive. In Huey's (1908) experimental records, white dots help to group and to show eye movements; however, they are not arranged in a line, but superimposed on each other, and it is often not possible to count them. Dearborn (1906) did succeed in counting pause lengths.

The following researchers obtained the indicated pause lengths in their experiments: Erdmann and Dodge, 250-400 msec.; Huey, 283-290 msec.; and Dearborn, 160-400 msec. Compared with the time of return movements, these values are very large.

Walker (1933) and Anderson and Swanson (1937) report that, among university students, expert readers show a 210 msec. pause-length, and poor readers 260 msec. on the average. When these are compared to 30 to 50 msec. movement time, we are struck by the extraordinary rapidity of movement.

We find that in all such research the first pauses in lines are somewhat longer than any others. Dearborn (1906) had subjects read material of a 151-cm. line length, and found the following percentages of the total pause time in each quarter: first, 30 percent; second, 23 percent; third, 23 percent; fourth, 24 percent. The reason for the larger percentage in the first quarter is the presence of the longest pause, the first one of the line. The author believes that after the long return movement from the preceding line, it takes time for the eyes to diverge and converge and prepare for further gazing.

Jumps or Flying Movement

As we know, an extraordinarily rapid movement of the gaze point, through swift rotation of the eye, brings the words farther along the line to the *fovea*. The movement is exceedingly rapid, one which I call a "jumping" or "flying" movement.

The question whether letters or words are perceived or not during the movement has been studied and discussed by others. Erdmann and Dodge (1898) reported that 12/13 to 23/24

of the whole reading time is spent in pauses, the rest in "flying" movements (1/13 to 1/24 or seven to four percent). Javal (1905) and Erdmann and Dodge insist upon the impossibility of perception of words during "flying" movement, because of its rapidity.

At the high speeds involved, black print on white paper will be experienced only as a grey blur, due to the fusion phenomenon. Since this fact was established experimentally, the impossibility of perception of any letters or words during "flying" movements has been ascertained. It has been shown in experiments by many researchers that the duration of eye movements is far shorter than any pause-time, even for the easiest sentences, and consequently letters and words can be perceived only during gazing pauses.

## Location of Pauses

Where do pauses fall? On what part of the line and on what part of the word? These problems have been studied by many.

It has already been established that pauses do not just follow the lines of sentences; the lines linking pauses are zigzag in form. Some pauses are found above the horizontal midline of the lines, others below. Some fall on words, while others on spaces between words. Some fall on the first half of words, others on the last half. It does not seem that they are located according to any one principle; they seem to be completely above the rules of grammar, syntax, and meaning.

It has been also established that the first and the last pauses fall somewhat inside of the line. Last pauses in all lines are found to be farther from the end of the line than first pauses are from the beginning. This indicates that the eye need not gaze at the first and last letters on the line, but can perceive the beginning and end of the line during pauses made in their vicinity. In the return movements from the last pause on one line to the first pause on the next, it is sometimes found that through overestimation of the return movement, the pauses fall outside of the new line; or through underestimation, too far inside of it. It is generally found that the first pauses are not on a straight line, but have a zigzag form. This tendency, however, is found especially among the inexperienced and unskillful; it is rare among adults and experienced readers. When the lines are of equal length, first pauses fall almost on a straight line, except in the first few lines. The readers acquire the habit of making uniform pauses while they read. For example, in poems, in which the lines are generally unequal, much over- and underestimation is believed to occur.

Research has also been done on the location of upper or lower parts of letters. Javal (1905) and others insist that pauses are more often located in the upper part of words than in the lower, because the letters (of the Roman alphabet) are more differentiated in their upper parts. Dearborn (1936) opposes this interpretation.

Huey (1908) studied the problem of whether pauses fall on the first or the last half of words. He found that the former was more frequent than the latter. His explanation is that in English the first half of words is more frequently accentuated than the last, and the accentuated parts often represent the words. In English there are more suffixes than prefixes, and word roots are found more frequently in the first than in the last half of words. Greater importance is thus attached to the first part of words. In English, we can associate the last half of words through the first half, but we can never derive the first half of words from the last. Having enumerated these reasons, Huey insists that pauses fall more often in the first half of words than in the last half.

Principles of location of pauses have been sought by many. Erdmann and Dodge (1898) originally insisted that pauses fall in the middle of words, but afterwards Dodge (1900), Huey (1908), and Dearborn (1936) stated that they fall on any point, and the first parts of words are not gazed upon more frequently than their endings. Sometimes pauses fall even on the blank spaces between words.

Indeed, at present, it is impossible to state definitively and in detail where pauses fall, but it is an important point that at each pause the eye perceives a group of neighboring letters or words simultaneously.

### Pause Habits

Dearborn (1936) discusses the habituation of pauses during reading. Regularity is hardly ever found in the beginning of reading, but when reading is continued, the number and timing of pauses in lines become almost uniform. This habit breaks down easily and quickly, however, when indistinct letters, misprints, or unknown, strange, or difficult words or expressions are encountered in the reading material. Even without these disturbances the habit is very easily broken, and Dearborn calls it a "short-lived habit" on this account. He believes that this habit is one of the characteristics of rapid readers. He further states that this habit is not found in all people, although it is advantageous in reading.

## READING CONDITIONS AND INDIVIDUAL DIFFERENCES

Eye movements differ widely according to readers, reading materials, and purposes. Even when reading the same materials, the number of pauses, pause-times, and various conditions of both vary widely among readers. When the same person reads various materials, the movements differ according to the materials. When he reads the same materials, the movements differ widely according to his purposes. Readers may have high or low intelligence, and extensive or limited knowledge. Some have had long experience and practice. Some materials contain many idiographs, while in others there are few. The print may be large or small. Some readers may attend to the characters only as in proofreading, while others read to catch the meaning of the sentence, hardly heeding the letters. In actual reading these factors are combined, resulting in a great variety and complexity of conditions. In each case the number of pauses, pause-times, and their combinations are quite different. These differences have been verified through experiments.

We will consider some varieties of reading with special regard to pauses, according to purpose and reading materials.

### Proofreading

In this type of reading, the individual does not desire to grasp the meaning of the sentence, but only to find errors in what is printed. The aim is naturally different from ordinary reading. Though the aims are different, the reading methods of the inexperienced, such as children or beginners, are very similar. Vernon (1920) studied eye movements during proofreading and reported that the number of pauses, pause-time, and regressive movements will increase somewhat.

### Test-Taking

Frandsen (1934) studied the manner of reading when subjects are undergoing tests. He reports that in comparison with the reading of ordinary scientific material, the number of pauses and pause-time were found to increase somewhat. As for eye movements, in right-or-wrong tests and performance tests, these are almost the same as for ordinary reading. But for questions in the form of analogy, and in assessing the degree of perfection in a printed character form, they differ somewhat from each other.

### Reading of Numbers

A number is a character having a meaning, and it requires correct reading. It has been found that the reading of a series of several numbers requires more pauses than ordinary reading. Although the eye can perceive several numbers simultaneously, it pauses at every number. When a group consists of three numbers, one or two pauses are made; when a group consists of four numbers, two or three pauses per group will be made. More pause-time seems to be required in the reading of numbers than in ordinary reading. However, familiar series of numbers

were perceived with only one pause (e.g., "1973," "1492").

Formulas

With mathematical or chemical formulae pause-time was found to increase, as in the case of numbers. But the most common formulae, such as $H_2SO_4$, HCl, $CO_2$, $(a+b)(a-b) = a^2-b^2$, were read with only one pause.

Foreign Languages

In reading a foreign language the number of pauses and pause-time was found to increase. Judd and Buswell (1922) had American students read French, while Futch (1935) had them read Latin to investigate this factor. The better the students were in a foreign language, the fewer the number of pauses and the shorter the pause-time they showed.

Return Movements

When it comes to the end of a line, the eye must proceed to the next line. At this point the return movement between lines takes place. From the last pause point, almost at the end of one line to the first pause point near the beginning of the next, the gaze point jumps through an extraordinarily swift rotation of the eye. The return movements, called "return sweep," may fluctuate from 40 msec. to 60 msec., according to the results of all researchers. As the author has already indicated, the first and last pauses are located inward from both ends of the line. The distance between the first and last pauses are found to be considerably shorter than the line length. Pauses are never found in return sweep; sweeps are very rapid and straight. At the last pause of the line, the beginning of the next line can be seen dimly in peripheral vision, provided that the line is not very long. When the image of the last part of the line falls on the yellow part of the fovea, the head of the next line is at its circumference. Aided by this obscure perception, the sense of contraction and stretching of muscles, especially of the *musculus rectus medialis* and *musculus rectus lateralis*, make the eye revolve. But the muscular perception is not very precise. Sometimes, over- or underestimation of the length occurs. For this reason, the first pause points are not always on a straight line, but zigzag slightly. However, if a "short-lived motor habit" has been formed, the habituated muscles are free from this tendency; unfortunately the habit is easily broken.

Regressive Movement

When some part of a sentence is not fully understood or some unfamiliar, indistinct, or misprinted words or letters are found in the sentence, regressive movements of the eye are sometimes found. The span of regression varies widely. Sometimes it occurs only once, while at other times it is repeated. Occasionally the eye regresses only for a few letters, but it may regress very widely, even as far as to the beginning of the sentence. (This fact shows that understanding is not achieved through the addition of each word, but through integration of the differentiated symbols. If understanding were the addition of the associated words, the eye would not necessarily regress to the beginning of the sentence, but would only regress to the word or letter which was not fully understood.) Regressive movements generally cease when the reader has either understood the sentence fully, by reexamining the part which had been an obstacle to the integration of the meaning, or has given up understanding the meaning, or reconsiders it.

It has been found that the number of pauses and pause-time increase during regressive movements, and that pauses are very irregularly located. This reduces greatly the efficiency of reading. Regressive movements sometimes occur even when there are no difficulties or defects in a sentence. This is generally found among beginners, inexperienced, or unskillful readers with bad habits. The performance of such readers is greatly impaired. As already mentioned, regressive movements also occur when readers desire to memorize or re-examine something they have read which may have aroused their interest or concern.

Generally speaking, all regressive movements degrade the efficiency of reading, because they require much time but do not produce additional understanding. Regressive movements generally disappear as learning progresses. But poor readers with bad habits must endeavor to eliminate them.

# PART THREE. EXPERIMENTAL STUDIES USING ARTIFICIAL MOBILE EYES AND CONTACT LENSES

Since the beginning of this century, experimental research on eye movements during reading has made remarkable progress. Despite the difficulties in recording eye movements, the effort of many pioneers has resulted in some brilliant results. There have been attempts at this research in Japan, but these have been few in number, and this line of research has been long neglected. This has been due both to the extreme difficulties in devising apparatus for recording the movements of such an exceedingly sensitive organ as the eye, and the heterogeneity of the Japanese language (Japanese is generally written in vertical lines, while European languages are written horizontally).

After World War II, however, Japanese began to be written in horizontal lines. The author then felt it all the more important to study the physiology and psychology of reading, and decided to make ophthalmological and psychological studies of the process of reading Japanese. The lack of apparatus for recording the movements of the eye, owing to its extreme sensitivity, has long been felt in Japan. A possible approach was to use an apparatus involving an artificial mobile eye and contact lenses, which were gradually coming into use in those days. These new methods met with considerable success, and much experimental data were obtained.

Eye movements during reading of the Japanese language in horizontal lines were examined in a series of studies: (1) using an artificial mobile eye connected to a kymograph drum; (2) using a mirror first with an artificial mobile eye and then with a contact lens; and (3) using an ophthalmograph. Each apparatus may of course show somewhat different results, for each has its own characteristics and creates different restraints upon the reading eye. Somewhat different results were in fact obtained, each of which is believed to be partially due to the difference in the apparatus and methods employed in the experiments.

The aims of this systematic series of studies were two: to examine what eye movements are made during the reading of Japanese sentences and to examine how these methods differ from each other from the point of view of eye restraint.

The control of conditions in these experiments was rather inadequate and, owing to the many difficulties involved, the results are not precise and exact. However, the outlines of eye movements during the reading of Japanese sentences did emerge, and an evaluation of each apparatus could be made. The expression "eye movements" means here the pauses, jumps, return movements between lines, and regressive movements, familiar to the psychology of reading European languages--not movements in three dimensions.

## USING AN ARTIFICIAL MOBILE EYE AND A KYMOGRAPH DRUM—EXPERIMENT I

### The Apparatus

The artificial mobile eye (Figure 22) is made of a chemically stable substance. It consists of two parts: an artificial cornea with root, and a base with a screw. The artificial cornea is painted to resemble the living eye. On the rear half of the base, there is a screw (3), while on the front there is a hole (4) in its stump end (2). Provided the eye muscles are healthy, the screw portion of the base is inserted into the posterior, operated part of the eyeball. The root

of the artificial cornea is then inserted into the hole on the stump of the base. The upper and lower lids (5) press against the surface of the artificial cornea and hold the entire assembly securely in the eye cavity. The artificial cornea moves with the base. When the neighboring, living eye moves, the artificial mobile eye may be expected to make movements corresponding to those of the living eye. What is known of physiology would lead us to predict that when the living eye reads, the artificial mobile eye will make corresponding movements. In a strict sense, the movements of the right and left eyes actually differ somewhat for stereoscopic perception, but this slight difference does not affect the data on the pauses and movements of the eye.

The recording apparatus is illustrated in Figure 23. By means of an eyelid-holder both eyelids are kept open. The artificial cornea is removed and the end of a horizontal straw rod (1) is inserted in the hole of the base. The rod has a joint near this end (2). The circular rotation of the artificial mobile eye is transformed into a movement of the straw rod in a horizontal linear direction. A slight movement of the straw rod moves the long straw rod stylus (3) near the fulcrum (4). The end point of the stylus moves along the very large circle with a diameter from the fulcrum to the point which can be recognized almost as a straight line. The end point (5) is in contact with smoked paper (6) on the slowly and uniformly rotating drum (7). The paper slides in a direction at a right angle to the straw rod. The point of the stylus of a Jacque's Chronometer, vibrating at 1/5 sec., is in contact with the edge of the smoked paper. A book stand is set about 30 cm. in front of the living eye. The angle of its surface is adjusted to the reader's preference. It is lighted by a pilot lamp. The reading material is set on the book stand. The whole apparatus is placed on a solid desk (8) completely free from the slightest vibrations. The head of the reader is also fixed in a head-holder (9) to free the measurements from the slightest movement.

## Subjects and Materials

Twelve subjects with artificial mobile eyes were employed, but precise, correct results were obtained only from three of them. They were 25 to 28 years old. It was unfortunately not possible to make an objective test of the difficulty of the sentences. Without testing them, the author endeavored as far as possible to make the materials equal in difficulty from beginning to end. Some difficult, strange, or unknown words and indistinct characters were completely removed from the sentences. Care was taken to make the reading normal. The materials were typewritten in horizontal line, with 32 letters per 160 mm. line, in blue ink, double spaced. The materials, from novels or essays by Japan's most distinguished writers, are listed in Table 6.

Table 6. Reading Materials used in Study of Eye Movements

| Author | Titles | Grade Level |
|---|---|---|
| Haxon | *From Ivory Tower* | High school, 2 year grade |
| Soseki | *Bochan* | Middle school, 2-3 year grade |
| Toson | *Sketch of Chikumagawa* | High school, 1-2 year grade |
| Kan | *Pearl Madam* | High school, 1-2 year grade |
| Doppo | *I Remember Them* | High school, 2 year grade |

## Instructions

At the "get ready" signal, the experimenter instructed the subject to gaze at the point on the material cover which corresponds spatially to a point immediately in front of the sentence to be read. He then sets the apparatus in action. When the rotation of the drum reaches a uniform speed and everything is ready, he takes off the material cover and gives the second signal, "Read." The subject then begins reading.

## Recording the Results

The movements and pauses of the artificial mobile eye during reading

were quantitatively and qualitatively recorded. But, owing to the extreme difficulties in arranging the apparatus, and the scarcity of subjects, the author could not obtain representative or typical samples, and the results were full of unmeasured values. Under these circumstances, it was concluded that statistical calculation would not be meaningful; but he was quite satisfied with the group of case studies. The results were arranged with the aim of obtaining experimental data on the pauses and movements of the artificial mobile eye during reading of Japanese reading materials.

The results obtained are believed to be almost equal to the values of the pauses and movements of the living eye actually reading. The values for the reading eye are thus deduced from the values obtained for the artificial mobile eye. While the values of the real eye and those of the artificial mobile eye may not be precisely equal to one another, the outlines of number of pauses, pause time, locations of pauses, and return sweep between lines can be fully revealed.

## Interpretation

Because the records are the results of horizontal movements which are transformed vertically at uniform speed, the vertical lines (strictly, curves), with vibration along the long side lines, show pauses; while the almost horizontal curves, with vibrations near the absolute horizontal line, show jumps of gazing points. (If the eye should stop absolutely, an absolutely vertical straight line is made.) Since the smoked paper glides uniformly, the length of paper is proportional to the movement or pause time. Curves over a long area of paper show prolonged behavior, while those over a short length indicate a brief action. For instance, a pause time is shown by the distance on the time line between the horizontal line at the beginning of the pause and that at the end of it. The time line is drawn by the stylus of Jacquet's chronometer through rejecting black particles on the smoked paper, on either edge of the paper. The unit is 1/5 sec. The pause time and other time segments on the time line are calculated by counting the vibrations between the relevant points.

The following movement phenomena during reading of Japanese sentences in horizontal lines were studied.

1. In reading Japanese sentences in horizontal lines, are there such phenomena as pauses and jumps of gazing points?

2. If there are such phenomena as pauses and jumping movements of gazing points, what is their nature? What are the relations between the two?

3. What is the approximate pause time? What is the approximate duration of the jumping movement?

4. What is the frequency of pauses?

5. Approximately how many letters does a pause encompass?

6. What is the nature of movements between lines? Approximately how long does it take?

7. What is the nature of regressive movements?

## Results

The results of the first series of experiments are considered.

1. In all records all oblique lines, from upper left to lower right, contain numerous interruptions of various shapes. This fact indicates that during reading the artificial mobile eye evidently makes pauses and jumps which alternate (Figure 24).

2. Two types of pauses and jumping movements were found. (a) Lines that are almost step-shaped, or those in which pauses and jumping movements can be distinctly discriminated, though with more or less vibrations (Figure 24A). Most readings were of this type. (b) Lines that are not step-like or groups of convex or concave lines. In the group of convex lines, movements are smoothly transformed to pauses, and the boundaries between movements and pauses are too indistinct to be clearly discriminated, while the transitions from pauses to movements are clearly and distinctly shown (Figure 24B).

In the group of concave lines, the transitions from movements to pauses are distinct, but those from pauses to movements are smoothly made and the boundaries between them are obscure (Figure 24C). In these types of lines the duration of pauses and movements can barely be measured separately. However, the existence of vertical lines does show that during reading the artificial mobile eye pauses. In fact, the step-like lines are found frequently while the others are considerably rarer.

The difference between pauses and movements is not absolute, but one of degree. The artificial eye base pauses with oscillation, but never stops completely.

3., 4., 5. It is extremely difficult, though not impossible, to separate the periods of pauses and movements and show their respective durations. In these studies some movement time was not separated from pause time for each measurement, but was included in what was called "pause time" in accordance with former opinions about the impossibility of perceiving movement (owing to its very short duration). The "pause time" in this study, therefore, is the time between the beginning of one pause and the beginning of the next one; consequently it contains the "pure" pause time along with a brief moment before the next pause. The pause times shown in Table 7 are "pure" pause times, obtained through multiplication of "pause time" by 0.97; the "pause times" between the beginnings of two pauses contain "pure" pause time of 0.7 percent, on the average, of movement between pauses, according to prior studies.

6. As for return movements between lines, smooth lines with no interruptions were found between the last pause in one line and a point close to the beginning of the next line in all the records by all subjects. Sometimes the last pause-points fall far inside the line, while the first pause-points fall more or less close to the beginning of the next line. This shows that during reading the base makes a rapid rotation (return sweep), during which it revolves without any pause or other deviation. It was also ascertained that during the localization of the gazing point, over- and under-adjusted and maladjusted localizations are sometimes found. Further, it was found that localization of the gazing point does not always fall right on the first letter of the next line. The quantitative results are shown in detail in Table 7. Owing to the weight on the artificial eye base, the return sweep in this study took more time than in later experiments.

7. Considering regressive movements psychologically, we can note that they are found where indistinct characters, misprints, and difficult, strange, or unfamiliar words trouble the reader. In such cases the eye revolves forward, backwards and forwards, or to-and-fro, until the reader understands the meaning of a word. He perceives and reads again and again, going back to the unfamiliar or doubtful letter or word, to the beginning of the phrase of the clause, or even the sentence or paragraph, in order to structure the whole meaning.

The reversal rotation of the artificial eye base is very rapid and similar to return sweeps between lines. In the movements towards the right, pauses and movements are combined.

In this experiment it was found that during the reading of Japanese sentences Kuwabara's artificial eye revolves with alternating pauses, vibrations, and jumps. Also, in the experimental study of reading in horizontal lines, under nearly equivalent conditions, by Huey (1908), Erdmann and Dodge (1898, 1900), Dearborn (1936), Gray (1917), McAllister (1936), Vernon (1920), Tinker (1936), etc., pauses with vibrations and movements combined with one another were clearly and distinctly shown with no exceptions. In the light of this fact, it may be concluded that the living eye of the reader shows pauses with tremors and rapid jumps, even though Japanese is very different from European languages in structure. If the reading eye performs such movements, it may be justifiably supposed that the movements of the living eye and the artificial eye base correspond with each other. But this relationship of correspondence cannot be fully ascertained until they are simultaneously recorded in the same subject using the same

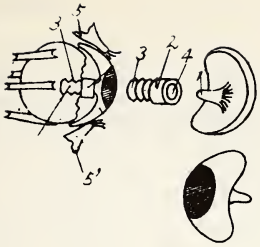


Figure 22. Structure and Placement of the Artificial Eye

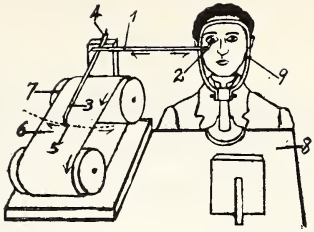


Figure 23. Kymograph Apparatus for Recording Movements of the Artificial Eye

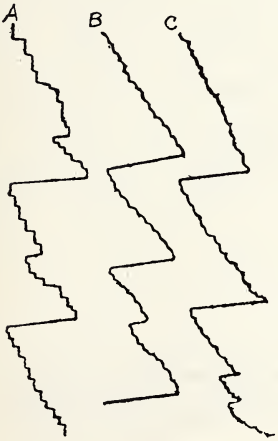


Figure 24. Records of Movements of the Artificial Eye During Reading With the Good Eye

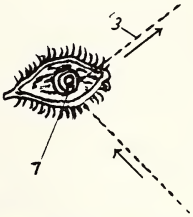


Figure 25. Placement of Mirror on Artificial Eye Stump

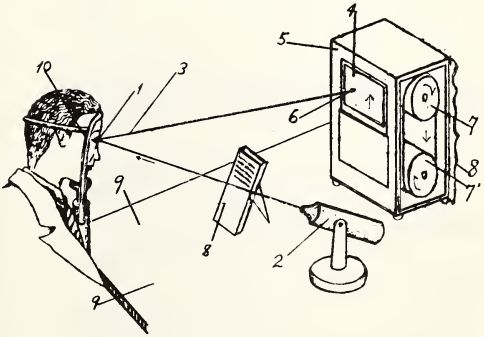


Figure 26. Apparatus for Photographically Recording Movements of the Artificial Eye

Table 7. Movements of Artificial Eye--Experiment I

| Subject | Reading Materials (32 letters per line) | Pause Time* | No. of Pauses per Line | No. of Pauses per 100 Characters | No. of Letters Perceived per Pause | Return Sweep Time* |
|---|---|---|---|---|---|---|
| Sasaki | *Chikumagawa--Sketch A* | 408 | 9.90 | 30.94 | 3.20 | 1530 |
| | *From Ivory Tower--A* | 496 | 10.00 | 31.25 | 3.20 | 900 |
| | *Botchan* | 446 | 7.00 | 21.88 | 4.50 | 1420 |
| | *How I Grew Up* | 522 | 12.00 | 37.50 | 2.50 | 1140 |
| | *From Ivory Tower--B* | 424 | 9.60 | 30.00 | 3.30 | 880 |
| | *Pearl Madam--A* | 462 | 13.10 | 40.94 | 2.40 | 1280 |
| | AVERAGE | 460 | 10.00 | 32.09 | 3.20 | 1200 |
| Kameko | *Pearl Madam--B* | 420 | 12.00 | 37.50 | 2.50 | 1300 |
| | *From Ivory Tower--B* | 500 | 14.00 | 43.25 | 2.30 | 1100 |
| | AVERAGE | 460 | 13.00 | 40.63 | 2.40 | 1200 |
| Imai | *The People I Cannot Forget--A* | 485 | 11.30 | 35.31 | 2.80 | 1500 |
| | *Chikumagawa--Sketch B* | 418 | 10.60 | 33.13 | 3.00 | 1300 |
| | *The People I Cannot Forget--B* | 640 | 21.00 | 65.62 | 1.40 | 1200 |
| | AVERAGE | 485 | 14.3 | 44.69 | 2.20 | 1330 |

*Thousandths of a second

reading material. Without such direct and stringent proof this supposition can have no absolute validity.

By summing the results of many previous European studies under similar conditions, the records of pauses and movements of the living eye in Experiment III (see below), and the simultaneous records of both eyes reading Japanese sentences in Experiment IV (see below), there is support for the supposition that the living reading eye and the artificial eye move together. Of course, the movements of the living eye which reads must be the standard by which we evaluate the movements of the artificial mobile eye.

## USING A LIGHT BEAM REFLECTED FROM A MIRROR ON THE ARTIFICIAL MOBILE EYE BASE—EXPERIMENT II

In this study the number of pauses, pause time, jumping movements, return movements between lines, and regressive movements during the reading of Japanese sentences in horizontal lines were investigated, using a light beam reflected from a mirror attached to an artificial mobile eye base in a dark room. The light beam was reflected and recorded onto a bromide-base, light-sensitive paper, gliding smoothly with uniform speed.

## The Apparatus

The artificial cornea was removed from under the eyelids, and the stump end of the base was bared. Both eyelids were prevented from blinking by means of a lid-holder. On the lower surface of the stump end of the artificial eye base an oxcillograph mirror (1) was applied (Figure 25). In the apparatus (Figure 26), a parallel light beam (3) from a lamp (2) is projected upon the mirror (1) and is reflected and caught upon a sheet of light-sensitive, bromide-silver-coated paper (4), moving smoothly at constant speed. The reflected light spot (6) moves on the bromide paper in accordance with the movement of the oxcillograph mirror. The bromide paper is long, 30 cm. in width, and is rolled up on two horizontal rollers (7). The reading material is placed on a book stand (8) which is set on the same desk (9). The reading material is printed in horizontal lines. When the subject reads, the light spot moves horizontally with horizontal rotation of the eye, but falls on the bromide paper which moves vertically. The movements of the light spot are caught and recorded. The parts of this apparatus are all set on a solid desk free from any vibrations. At the edge of the desk stands a head-holder (10), to free the measurement recording from extraneous vibrations.

Although parts of the apparatus and the method are somewhat different from those of Experiment I, the fundamental principle of recording movements is the same. In this apparatus, however, there is no resistance caused by weight on the eye during movements.

## Subjects and Materials

Twelve subjects with artificial mobile eyes were employed in all, but among these, correct and precise results were obtained from only two. They were 25 and 28 years old. In this experiment also, owing to the difficulties involved, preliminary objective tests as to the difficulty of the sentences were not attempted. However, the experimenter took pains to make the materials equal in difficulty from beginning to end. Some difficult, strange, or unknown words and indistinct characters were completely removed from the sentences. He endeavored to make the reading normal. The materials were typewritten in horizontal lines, with 12, 15, and 20 letters per line, in blue ink, double spaced.

The materials were chosen from a textbook of the Japanese language for elementary school (IV Form, Kunio Yanagida, *New Japanese Language*). The two sets of reading materials ("Mother Day"; "From a Photo-Album") were copied on a Japanese typewriter, in horizontal lines, with line distance of 3.2 mm., 12 letters to a 40 cm. line, 15 letters to a 48 cm. line, and 20 letters to a 65 cm. line.

## Procedure

Each subject was taken to the dark room and instructed to sit on a chair. Here his head was immobilized, his artificial cornea taken off, his lids held with a lid-holder to prevent blinking, and a small mirror applied on the stump end of the artificial eye base. Thus, during his reading the reflected light spot will pause and jump on the paper.

The experimenter instructed the subjects to read normally, in silence, neither too quickly nor too slowly. At the first signal, the subject is to get ready for reading, and gaze at the point on the material cover which, when displaced, corresponds spatially with the point immediately in front of the sentence to be read. The experimenter then sets the apparatus in action, making sure that the bromide paper moves smoothly upwards at constant speed. The lamp is adjusted so that the projected light beam falls precisely on the small mirror, and the reflected light spot falls properly on the bromide paper. As soon as he sees that the apparatus and the subject are ready, the experimenter gives the second signal, "Read," and takes off the material cover. Then the subject begins to read.

## Recording the Results

The movements and pauses of the artificial mobile eye during reading were quantitatively and qualitatively recorded. But, again owing to the extreme difficulties in setting up

apparatus and the scarcity of subjects, representative or typical samples could not be obtained and the results were full of unmeasured values. Under these circumstances statistical calculations would have little meaning, and were given up, and we satisfied ourselves with the group of case studies. The results were arranged with the aim of obtaining some data on pauses and movements of the artificial mobile eye during reading.

The results obtained are of pauses and movements of the artificial mobile eye. They are also believed to be nearly equal to the values of the pauses and movements of the living eye actually reading. These values are assumed to differ only slightly, if at all, from those for the artificial mobile eye.

Since the records are the result of horizontal movements transformed vertically at uniform speed, the vertical lines (strictly speaking curves) made by the light spot, with oscillations along their length, indicate pauses with tremors. Jumps of gazing points would be indicated by nearly horizontal lines. In reality, however, these lines can hardly be seen because the jumping movements of the light spot were too fast to expose the bromide paper. Since the bromide paper moves at uniform speed, the length of paper is proportional to the pause or movement time. Curves extending over a long span of paper indicate prolonged behaviors, while those within a short span show brief actions. For instance, a pause time is indicated by the vertical length of paper between the horizontal lines at the beginning and end of the pause (Figure 27).

In Experiment II no device for the measurement of time was used. To measure pause or movement time a special scale must be used (100 cm. = 30 sec.; 1 cm. = 0.3 sec.). Any time on the scale thus can be computed.

The aims of the research were identical to those in the first study.

Results

1. All the oblique lines from upper left to lower right contain longer or shorter, more or less oscillating, sensitized lines--which are pauses. If the end of each pause were connected to the beginning of the next, the whole line would have the form of steps. The horizontal lines can hardly be seen. The rapidity of the jumping movements precludes the exposure of the bromide paper, and only the vertical oscillation lines can be found. With these photographic methods it can be seen clearly that in reading Japanese sentences the eye makes alternating jumps and pauses (Figure 27).

2. On all the records the vertical lines oscillate, and absolutely smooth and vertical lines are not found (Figure 27). This shows that during reading the artificial eye base does not stop completely, but always pauses with some degree of tremor. It can be inferred that the living eye actually reading beside the artificial eye pauses and jumps alternately. The pauses of the artificial eye base correspond to the pauses of the living eye, in which some part of the sentence falls on the *fovea centralis* and is gazed at and perceived clearly; the jumping movements of the light spot from the mirror on the base correspond to the rapid rotation of the living eye to displace its fixation point (gaze point) forward.

Note: The shapes of pauses and jumping movements obtained in Experiments II and III were almost identical, so the same illustration (Figure 27) is used for both.

3, 4, 5. The meaning of pause time is the same as in the first experiment (for details of pause time, see Tables 8 and 9).

6. The light trace of the return movement cannot be found. The fact that the light trace between the end of one line and the beginning of the next can hardly be seen indicates that the artificial eye base makes very rapid rotations, and that no pauses or stops are ever made during rotations. This precludes the adequate exposure of the bromide paper. It suggests that the living eye makes rapid return sweeps between lines. The photographic records show that in return sweeps the living eye does not always gaze at the last letter in a line or the first letter of the next line, but rather both points fall within the lines.

Table 8. Movements of Artificial Eye--Experiment II

| Subjects | Letters in Line | Pause Time Avg.* | No. of Pauses per Line | No. of Pauses per 100 Letters | Perceived Letters in a Pause | Return Sweep Time Avg* |
|---|---|---|---|---|---|---|
| Ito | 12 | 720 | 5.00 | 43.33 | 2.54 | 244 |
| | 15 | | | | | |
| | 20 | 686 | 9.80 | 49.00 | 2.04 | 156 |
| Sakamoto | 12 | 490 | 3.90 | 32.50 | 3.07 | 160 |
| | 12 | 522 | 4.50 | 37.50 | 2.44 | 192 |
| | 15 | 466 | 4.00 | 26.67 | 3.75 | 146 |
| | 15 | 476 | 5.10 | 34.00 | 3.93 | 386 |
| | 15 | 370 | 5.00 | 33.33 | 3.00 | 372 |
| | 15 | 404 | 4.30 | 28.62 | 3.48 | 146 |

*Thousandths of a second

In the second experiment the artificial eye base is free of the resistance of the straw rod which obtained in the first experiment. The return sweep time in Experiment II was found to be much shorter than that in Experiment I. The details of return sweep time are shown in Table 8.

7. Regressive movements were not found in this study.

In Experiment II, Kuwabara's artificial eye (base) was shown to display alternate pauses with jumping movements. We might believe that the perfect artificial mobile eye would perform exact and natural corresponding movements with the real eye. At this stage of research, however, we cannot know definitively whether it has such perfect function or not. As already stated above, we cannot know this until the movements of both the real and the artificial eye of the same person can be objectively, simultaneously, and directly recorded and ascertained. This indeed may be the logically and scientifically correct procedure, but it would prove extremely difficult if not impossible to do in a patient with an artificial mobile eye.

We then have to depend upon the physiological principle of correspondence, and the many facts of pauses and movements during reading. Using these criteria, the author assumes that Kuwabara's artificial mobile eye must mimic closely the living eye reading beside it.

## USING A LIGHT BEAM REFLECTED FROM A MIRROR ON A CONTACT LENS— EXPERIMENT III

In this experiment the number of pauses, pause time, jumping movements, return movements between lines, and regressive movements during the reading of Japanese sentences in horizontal lines will be investigated, using a light beam reflected on a mirror applied to a contact lens on the eye actually reading, in a dark room. The reflected light beam is caught on bromide paper moving at uniform speed.

### The Apparatus

In Experiment II a small mirror was applied on the artificial eye base

Table 9. Movements of Artificial Eye--Experiment II--by Line Length

| | Subject | 12 Letters in a Line | Avg. | 15 Letters in a Line | Avg. | 20 Letters in a Line | Avg. |
|---|---|---|---|---|---|---|---|
| No. of Pauses per 100 Letters | Ito | 43.33 | 43.33 | | | 49.00 | 49.00 |
| | Sakamoto | 32.50 | | 26.67 | | | |
| | | 37.50 | 35.00 | 34.00 | | | |
| | | | | | 30.66 | | |
| | | | | 33.00 | | | |
| | | | | 28.62 | | | |
| Perceived Letters per Pause | Ito | 2.54 | 2.54 | | | 2.04 | 2.04 |
| | Sakamoto | 3.07 | 2.76 | 3.75 | | | |
| | | 2.44 | 2.76 | 2.93 | 3.29 | | |
| | | | | 3.00 | | | |
| | | | | 3.48 | | | |
| No. of Pauses per Line | Ito | 5.00 | 5.00 | | | 9.80 | 9.80 |
| | Sakamoto | 3.9 | | 4.00 | | | |
| | | 4.50 | 4.20 | 5.10 | 4.60 | | |
| | | | | 5.00 | | | |
| | | | | 4.30 | | | |
| Pause Time* | Ito | 720 | 720 | | | 686 | 686 |
| | Sakamoto | 490 | | 466 | | | |
| | | 522 | 506 | 476 | | | |
| | | | | 370 | 429 | | |
| | | | | 404 | | | |

*Thousandths of a second

beside the eye actually reading. In this experiment it is applied directly on the real eye itself (Figure 28). At the exact point where the upper and lower lids touch when the contact lens (1) is applied on the cornea, a very small cavity is cut out for a mirror (2). A mirror is placed into the cavity and fixed using acetate in which some colorless, transparent celluloid is melted. The preparation covers the mirror smoothly so that the subject experiences neither pain nor disturbance of perception. The mirror is located somewhat acentrically below the center of the contact lens. It is fitted here to reflect the light beam optimally for recording in a natural situation.

The mechanism and function of the recording apparatus are the same as those used in Experiment II. A parallel light beam, focused through the lenses of a lamp, is projected on the small mirror and is reflected from it. The reflected light beam falls on the moving bromide paper carried on the pair of rollers rotating with uniform speed. The horizontal movements of the contact lens is recorded on the vertically sliding bromide paper (Figure 26). As in Experiments I and II, the subject's head was held motionless during reading so that the slightest vibration would not disturb the recording.

## Subjects and Materials

Thirteen normally sighted university students, 21 to 23 years old, were used. In this experiment also, no special preliminary objective test of the difficulty of the sentences was attempted. However, the experimenter did endeavor to make the materials as uniform in difficulty as possible. The materials were selected from the "Newspaper of Junior Grade Pupils" (*Chugakusei-Shimbun*). They were printed in horizontal lines, in black ink, on sheets of matte white paper. Line spacing was 60mm, lengths were 40mm (with 8 letters), 60mm (with 12 letters), 75mm (with 15 letters), 100mm (with 20 letters), 125mm (with 25 letters), 150mm (with 30 letters), and 200mm (with 40 letters).

## Procedure

As in Experiments I and II, the experimenter instructed the subjects to read in their normal manner, in silence, neither too quickly nor too slowly. The subject put on the contact lens and was taken into the darkened room. The experimental procedure was the same as in Experiment II, and is omitted here. The only difference was that the mirror was applied to the contact lens fitted to the cornea of the eye which was reading.

Though the technique of the experiment was fairly difficult, subjects were not patients with an artificial mobile eye, but normal university students. The experimenter could obtain a considerable number of subjects, and the research did not have to be confined to case studies. Though the statistics were not perfect, and there were some unmeasured values, he could get samples far more conveniently than for Experiments I and II. Thus the results can be expected to be more valid and reliable.

## Results

The results were quantitatively and qualitatively arranged according to research aims, as in Experiments I and II (Tables 10 and 11). In terms of pauses and jumping movements, the interpretation of the records of movements is, on most points, the same as in Experiment II. In this study also, a special scale (100 cm. in 30 sec.; 1 cm. in 0.3 sec.) had to be used to measure pause or movement time (Figure 27).

In all records the lines were of step-like form, with horizontal lines which were hardly perceptible. All the vertical lines were oscillating and clearly visible. From this it can be concluded:

1, 2. Results exactly as in Experiment II.

3. Results in agreement with Experiment II; see Table 10 for details of pause time.

4. See Table 11 for details regarding number of pauses.

Table 10. Pause-Time for Lines of Various Lengths--Experiment III*

| | Letters per line | | | | | | | | |
|---|---|---|---|---|---|---|---|---|---|
| Subjects | 8 | 12 | 15 | 20 | 25 | 30 | 35 | 40 | |
| Han. | 410 | 320 | 320 | 440 | 574 | 323 | 335 | 330 | |
| O. | 530 | 413 | 420 | 450 | 370 | 420 | 390 | 420 | |
| I. | 299 | 355 | 314 | 301 | 324 | 356 | 352 | 343 | |
| N. | 521 | 451 | 435 | 435 | 480 | 480 | 486 | 556 | |
| Hag. | 262 | 305 | 264 | 303 | 289 | 268 | 310 | 287 | |
| Tai. | 353 | 285 | 279 | 343 | 332 | 354 | 367 | 288 | |
| Ka. | 323 | 350 | 366 | 346 | 358 | 318 | 362 | 315 | |
| F. | 385 | 383 | 383 | 423 | 380 | 369 | 361 | 463 | |
| M. | 362 | 497 | 375 | 390 | 371 | 367 | 406 | 442 | |
| S. | 352 | 442 | 348 | 410 | 320 | 317 | 320 | 316 | |
| Hat. | 287 | 350 | 330 | 331 | 290 | 370 | 352 | 318 | |
| G. | 305 | 353 | 343 | 327 | 279 | 360 | 326 | 447 | |
| T. | 303 | 244 | 421 | 357 | 342 | 336 | | | |
| Totals | 4692 | 4748 | 4598 | 4856 | 4709 | 4638 | 4367 | 4525 | 37133 |
| Average | 361 | 365 | 354 | 374 | 362 | 357 | 364 | 377 | 364 |
| S.D. | 81.0 | 67.2 | 46.4 | 48.4 | 77.8 | 47.6 | 47.6 | 82.8 | 63.2 |

*Thousandths of a second

Figure 27. Photographic Records of Artificial Eye Movement

Figure 28. Placement of Contact Lens and Mirror

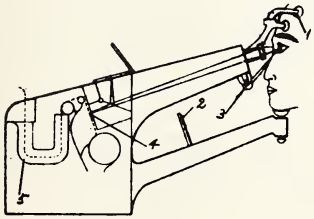


Figure 29. The Ophthalmograph

Figure 30. Ophthalmograph Record of Movement of Both Eyes

Table 11. Number of Pauses per 100 Letters--Experiment III

| | Letters per Line | | | | | | | | |
|---|---|---|---|---|---|---|---|---|---|
| Subjects | 8 | 12 | 15 | 20 | 25 | 30 | 35 | 40 | |
| Han. | 61.73 | 62.11 | 61.73 | 62.50 | 70.92 | 55.87 | 51.81 | 62.02 | |
| O. | 52.06 | 57.14 | 54.95 | 88.31 | 66.67 | 54.05 | 71.93 | 56.81 | |
| I. | 45.87 | 44.84 | 42.92 | 42.19 | 32.79 | 44.25 | 42.55 | 35.71 | |
| N. | 53.48 | 36.90 | 36.63 | 37.17 | 33.33 | 36.23 | 25.71 | 33.33 | |
| Hag. | 33.78 | 43.29 | 30.67 | 32.47 | 30.03 | 35.97 | 32.89 | 28.01 | |
| Tai. | 52.06 | 56.82 | 51.81 | 41.67 | 41.84 | 50.00 | 51.55 | 57.14 | |
| Ka. | 57.47 | 52.06 | 38.61 | 39.22 | 38.61 | 35.84 | 41.49 | 38.76 | |
| F. | 32.15 | 31.44 | 29.67 | 24.33 | 26.38 | 27.40 | 24.57 | 27.03 | |
| M. | 33.33 | 35.21 | 29.40 | 25.00 | 23.49 | 30.03 | 26.45 | 24.21 | |
| S. | 47.85 | 32.47 | 28.01 | 21.46 | 24.81 | 23.31 | 25.71 | 26.67 | |
| Hat. | 35.46 | 35.84 | 25.57 | 30.12 | 28.09 | 30.03 | 22.88 | 30.03 | |
| G. | 47.39 | 39.53 | 38.31 | 40.82 | 30.03 | 45.05 | 26.67 | 30.03 | |
| T. | 32.15 | 33.33 | 29.50 | 28.01 | 33.00 | 30.03 | | | |
| Totals | 584.78 | 560.98 | 497.78 | 463.27 | 479.47 | 498.06 | 444.21 | 429.75 | 3858.30 |
| Average | 44.98 | 43.15 | 38.29 | 35.64 | 36.88 | 38.31 | 37.02 | 35.81 | 37.83 |
| S.D. | 10.60 | 10.55 | 11.15 | 10.65 | 14.85 | 10.35 | 14.65 | 11.25 | 12.35 |
| Perceived Letters in a Pause | 2.22 | 2.31 | 2.61 | 2.80 | 2.71 | 2.71 | 2.70 | 2.80 | 2.64 |
| Average No. of Pauses in Various Lines | 3.59 | 5.18 | 6.64 | 7.13 | 9.22 | 11.49 | 12.64 | 14.32 | |

5. Regarding letters perceived during a pause, see Table 11.

6. Results indicate that the nature of return sweeps between lines is quite the same as in Experiments I and II.

7. The regressive movements observed were quite similar to those found in Experiment I. Regressive movements are exceedingly rapid, as are return sweeps between lines. The lack of recording of their paths in the records implies clearly their extreme rapidity. In advancing toward the right from the point to which the gaze regressed, the oscillating pauses and rapid jump movements alternate with one another.

In this experiment the subjects never complained of pain or unnaturalness in wearing the contact lens, and still less of double images. Further, in removing the contact lens from the eye after the experiments, the author found that it was fixed tightly to the surface of the cornea. Consequently the movements of the contact lens can be identified with those of the eye itself and could therefore be known; now we have only to compare prior studies with the facts discovered in the contact lens experiment. In the reading of Japanese sentences under similar conditions, it was discovered that the movements of the eye really reading (as shown in Experiment III) were very similar to those of the artificial mobile eye (as shown in Experiments I and II) in pauses, movements, and return-movements between lines. Now we can say that the healthy reading eye paired with the artificial mobile eye made almost the same pauses and movements in space and time as those of the artificial mobile eye (basket).

## USING AN OPHTHALMOGRAPH—EXPERIMENT IV

This research had two purposes: a concern with eye movements, and especially pauses, during reading of Japanese sentences; and a re-examination of the physiological principle of binocular correspondence of movements--seeking confirmation of correspondence, and an evaluation of the apparatus used in Experiments I, II, and III, and the results obtained using artificial eyes and contact lenses. All these studies are based entirely on the physiological principle of binocular movements, and on data on pauses and movements during reading reported by European and American ophthalmologists and psychologists. By the use of the ophthalmograph, which can photograph simultaneously the movements of both eyes, the author wished to verify, evaluate, and discuss each method and apparatus used (artificial eyes and contact lenses).

### The Apparatus

This experiment was not carried out in a dark room, but in a normally lighted room. The apparatus used was a "Master Ophthalmograph" made by the American Optical Company (Figure 29). The subject sat on a chair. The experimenter adjusted his position so that both eyes were just in front of the two cylinders containing the lenses. The subject's head was then held by the head supporter (1). A book stand (2), where the reading material was to be set, was located somewhat below the eye. When the subject read this material, two electric lights (3), each five watts, six candlepower, placed in front of the eyes, formed images in the eyes. These two lights also served as pilot lamps for the material. Each eye thus had a light spot image in it. The light spots were photographed through each respective cylinder on panchromatic 35mm film (4), moving smoothly at uniform speed. The film moves five inches per minute and stops automatically when 18 inches have been run. The sensitized film automatically passes through a tank (5) for development and fixation, and then emerges from the ophthalmograph. The developed and fixed film is nearly dry, and shows pauses and jumping movements of the eye clearly. Unfortunately the lines produced are extremely small and defy the recording of time. The film can be enlarged, but the lines are too obscure to discriminate (Figure 30).

### Subjects and Method

Seventeen normally sighted university students, 19 to 25 years old,

were chosen. Eight had been subjects in Experiment III, while the rest were newly recruited. Reading materials were the same as used in Experiment II. The experimenter instructed the subjects to read silently in normal manner, neither too quickly nor too slowly, as in Experiments I, II, and III. At the first signal from the experimenter the subject got ready to read and waited. The experimenter then set the apparatus in action and gave the second signal, "Read." As he gave the signal, he took the cover off the reading material.

The interpretation of the records is quite similar in principle as that for Experiments II and III. In those experiments, the records were shown on bromide paper, 250mm in width; in this experiment they were made on 35mm film. Although the record is only 1/49th of the area of the light sensitive paper, the film is far more sensitive.

Results

The results are arranged to demonstrate the pauses and jumps of the eye during reading, and to verify objectively the relation of correspondence in pauses and jumps.

The film records were first enlarged. The left and right film record lines (Figure 30) were enlarged 16:1 and the extent of their overlap tested. The two lines were found to overlap nicely and whatever minute differences were present represented a deviation of less than a line's width.

The research aims were the same as in Experiments I, II, and III. In addition, confirmation and evaluation was sought regarding the recording apparatus, artificial eyes, and contact lenses, and of course the reading behavior of living eyes.

1. During the reading of Japanese sentences, both eyes alternate with an oscillating pause and a rapid jump movement. In any one line they combine alternately, corresponding with one another with almost equal movements.

2. During pauses neither eye stops completely when gazing at some point; each pauses oscillating, with more or less tremor in limited areas.

3. Most of the reading time is spent in pauses; hardly any time is spent in jumping movements. The pause time in Table 12 is an approximation obtained by the division of the approximate sum of the pauses by the number of pauses in any given line.

4. The number of pauses is shown in Table 13.

5. Perceived letters during a pause are also shown in Table 13.

6. The clearly sensitized lines in the records show that the nature of return sweeps between lines is the same as in Experiments I, II, and III.

7. From the sensitized records, it can be seen that regressive movements are of the same nature as those in Experiments I and III.

The question of the reconfirmation of the movements of real eyes during reading, and the evaluation of the ophthalmograph, will be taken up later.

## CONCLUSION

The author, who had conducted experimental studies of braille reading many years ago, had long desired to study eye movements during the reading of Japanese sentences. He had been held back by the extreme difficulty of objectively recording these movements from the sensitive eye itself. After repeated failures, he learned of the artificial mobile eye and of how it could be used instead of the real eye. Contact lenses were also then becoming increasingly popular and could be used in recording eye movement. These substitutes were used immediately in experiments. While the contact lens experiment was under way, the development of the ophthalmograph was announced. Clearly, this device would throw additional light upon problems encountered in the research. Eight or nine years had by then passed since the first use of the artificial mobile eye.

Table 12. Pause-Time for Lines of Various Lengths--Experiment IV*

| Subjects | Letters per Line 8 | 12 | 15 | 20 | 25 | |
|---|---|---|---|---|---|---|
| Hig. | 267 | 270 | 288 | 279 | 292 | |
| Hat. | 183 | 213 | 202 | 206 | 195 | |
| S. | 301 | | | | | |
| M. | 210 | 252 | 261 | 297 | 257 | |
| K. | 272 | 314 | 325 | 389 | 256 | |
| Ok. | 342 | 319 | 300 | 316 | 283 | |
| U. | 259 | 234 | 266 | 226 | 243 | |
| I. | 301 | 343 | 263 | 242 | 252 | |
| Ike. | 220 | 222 | 205 | 211 | 209 | |
| Ka. | 268 | 280 | 245 | 246 | 254 | |
| Mat. | 282 | 291 | 307 | 317 | 307 | |
| Han. | | | 247 | | 259 | |
| Y. | | 184 | 188 | 206 | 180 | |
| O. | | 306 | | 255 | 217 | |
| Ku. | 301 | 222 | 236 | 207 | 219 | |
| G. | 225 | | 180 | 276 | 207 | |
| Ta. | 208 | 205 | 215 | 209 | | |
| Totals | 3639 | 3655 | 3728 | 3882 | 3630 | 18534 |
| Average | 260 | 261 | 249 | 259 | 242 | 254 |
| S.D. | 46.4 | 45.8 | 44.4 | 49.4 | 37.8 | 41.2 |

*Thousandths of a second

Table 13. Number of Pauses per 100 Letters--Experiment IV

| Subjects | Letters per Line 8 | 12 | 15 | 20 | 25 | |
|---|---|---|---|---|---|---|
| Hig. | 48.8 | 36.1 | 40.0 | 40.0 | 46.1 | |
| Hat. | 32.5 | 26.2 | 31.6 | 25.7 | 26.9 | |
| S. | 48.1 | | | | | |
| M. | 35.5 | 33.3 | 37.0 | 28.6 | 28.9 | |
| K. | 50.0 | 51.0 | 46.7 | 45.0 | 43.3 | |
| Ok. | 62.5 | 55.2 | 44.0 | 45.9 | 49.3 | |
| U. | 41.7 | 33.3 | 41.0 | 37.4 | 35.6 | |
| I. | 40.3 | 39.8 | 45.9 | 46.3 | 35.3 | |
| Ike. | 42.9 | 26.9 | 35.0 | 46.5 | 32.8 | |
| Ka. | 66.2 | 50.0 | 47.4 | 40.5 | 46.5 | |
| Mat. | 36.2 | 36.6 | 34.1 | 30.8 | 28.9 | |
| Han. | | | 33.3 | | 40.0 | |
| Y. | | 39.5 | 48.1 | 40.0 | 40.7 | |
| O. | | 45.9 | | 41.7 | 42.4 | |
| Ku. | 39.2 | 36.4 | 37.7 | 31.3 | 34.2 | |
| G. | 47.8 | | 33.3 | 35.8 | 35.0 | |
| Ta. | 29.6 | 34.8 | 31.6 | 28.2 | | |
| Totals | 621.3 | 545.0 | 591.7 | 563.7 | 565.9 | 2887.6 |
| Average | 44.38 | 38.93 | 30.45 | 37.58 | 37.73 | 39.56 |
| S.D. | 13.70 | 8.75 | 9.10 | 6.10 | 7.50 | 8.30 |
| Perceived Letters in a Pause | 2.26 | 2.57 | 2.53 | 2.66 | 2.65 | 2.52 |
| Average No. of Pauses in Various Lines | 3.55 | 4.92 | 5.92 | 7.51 | 9.43 | |

This research has been described as a systematic series of studies, they were not so from the beginning. It is only from the viewpoint of analysis that this research can be seen to form a natural system. For instance, the weight imposed on subjects' eyes became lighter and lighter from Experiment I to Experiment IV.

The research may also seem to be rash and unscientific, because many conditions were not satisfactorily controlled; for example, the subjects were different for each study and so were the apparatus and reading material. But the primary aim in this series of studies was to discover the general outline of pauses and jumping movements during the reading of Japanese sentences. The author was well aware that under imperfect conditions he could hardly have obtained unquestionably reliable and universally valid results regarding eye movements during reading. It is for this reason that Experiments I and II are called "case studies."

Luckily, the fundamental facts about oscillating pauses and jumping movements occurring during the reading of Japanese texts could be obtained also through assumptions based on recognized theories from Europe and America, and on physiological principles of binocular movement. In Experiment III, however, more results were obtained from a considerably larger population, and, through the use of a contact lens, the movements of the living eye actually reading were recorded directly.

Furthermore, in Experiment IV, using the ophthalmograph, the almost identical movements of both eyes were objectively confirmed. In Experiments I and II it was found that the artificial eye produced step-like traces, indicating pauses and jumping movements. At the same time, many earlier results showed that the living eye pauses and jumps during reading. On the basis of these facts, the author made the assumption that the mobile artificial eye corresponds in behavior to the living eye. An absolute relationship of correspondence cannot be ascertained unless a simultaneous experimental recording of binocular movements has been tried with the same person, using the same reading material and the same apparatus. Results from the ophthalmograph have supported the reliability and validity of assumptions from the artificial mobile eye to the living eye, and from the living eye to the artificial mobile eye. The assumption was, therefore, not seriously mistaken.

The author believes that this work is merely a prolegomenon to a full understanding of the physiology and psychology of the reading of Japanese texts. In Experiments I through IV, only the fundamental facts concerning the correspondence between both eyes, pauses, jumping movements, return sweeps, and regressive movements during the reading of Japanese sentences were revealed. Further research into the details is much to be desired.

## Future Research

There are many interesting problems concerning the psychological aspects of reading, e.g., the relation between level of difficulty and pauses; pause-time and the number of pauses which vary according to the level of difficulty of the sentence. Further, there may well be changes according to the length of lines, the type size, and whether the arrangement of letters is in horizontal or vertical lines. Unfortunately no such research has been undertaken so far.

Indeed, in the present studies, detailed quantitative and qualitative research of these problems was not attempted, although the rough observations in Experiments III and IV do indicate that the more difficult sentences are, the more the number of pauses and pause-time will increase. As to line lengths, too long or too short lines seem to be inefficient, while moderate length lines seem best for readers. The length and number of pauses may also fluctuate according to the attitude of the readers. These problems are of interest and of importance in the efficiency of reading. Further work along these lines would be desirable.

# PART FOUR. A COMPARISON OF VISUAL AND TACTILE READING

In this concluding chapter, the author will make some comparisons between eye movements and their functions in visual reading, and the movements of the fingers in tactile reading of braille text materials. An attempt will be made to outline the important problems remaining, to describe the facts of what we now know, and to discuss the implications of both for sighted and tactile reading.

## Pause

There is wide agreement among Western psychologists--now supported by the author's results--that in visual reading the eye does not move smoothly, but pauses and moves in alternation. That is, fixations on points along a line of text are combined with flying movements, thus progressing from left to right along lines. Furthermore, during long pauses letters, words, or short sentences are perceived all at once, whereas no recognition occurs during flying movements.

In the experiments on tactile reading, pauses were found to be rare. It may be said that, basically, the fingers read through movement, since when the finger stops moving, only the letter directly under it can be read. To be sure, among a few tactile readers of medium ability, something like pauses are found, but they are brief--one might say minute--and hardly perceptible, at least with the techniques used.

## Movement

In these experiments and in the work of other psychologists, it is clear that the movements of the eye are so rapid that no perception of words or letters occurs during them; but in reading braille, perception occurs only during movement.

## Pause Time

The greater part of the reading time in visual reading is spent in pauses. In fact, between 92 and 98 percent of total reading time is spent in pauses, the rest in flying movements. In contrast, pause time is an insignificant portion of total reading time in reading braille. When such pauses do occur, they are very short and hardly perceptible. Pause time during visual reading was found to be between 254 and 468 msec, with a mean duration of 400 msec.

## Number of Pauses

For visual reading, when reading skill improves the number of pauses declines and, conversely, when reading skill is poor the number of pauses rises proportionally. High reading "skill" is found when "easy" reading material is used by the moderately experienced reader, or when the reader is knowledgeable and intelligent. Beginners or readers of low skill thus read with many pauses, while the expert and practiced read with few and, where present, rhythmical pauses.

In contrast, the better the braille reader, the fewer up-and-down, zig-zag movements, and irregular finger pressures one finds. The reading finger moves smoothly and movements and fluttering motions become more rhythmical.

In general, the number of pauses is related to pause-time duration in visual reading, while the number of zig-zag and up-and-down movements, and irregular finger pressures are related to the time spent for these motions and the total time for the reading of a sentence. For both modes of reading, the total time for reading a sentence is related to the number and duration of zig-zag, up-and-down, and fluttering movements,

and irregular finger pressures; obviously any means to reduce these wasted motions would be desirable.

## Span

In the visual reading of Japanese material, it was generally considered that perceptual span covered roughly three to five words. In the present experiments with Japanese materials, under admittedly restrictive conditions, the span was found to be only about 2.8 letters and/or characters. One cannot conclude hastily, however, that one system of writing is superior to the other, since Western languages make use of alphabets. Alphabetic characters have no inherent meaning when isolated; they acquire a meaning when they are combined. Japanese sentences consist of both kana (corresponding to alphabetic characters) and kanji (ideographs having meaning in themselves). Thus, the language structures differ fundamentally. This is the reason why comparisons of legibility and readability between the two language groups cannot be known without extensive experimental investigation. In the reading of braille, however, span is not a relevant issue, since as we have already indicated reading activity takes place through a smooth translational movement with scarcely any pauses at all.

## Location of Pauses

Pauses in visual reading occur irrespective of meaning, grammar, or rhetoric. The pattern likewise does not correspond to a line representing a sentence. Indeed, some pauses deviate from the sentence line. This is why a line connecting points at which pauses occur is not straight. Pauses occur rarely in braille reading, as we have noted; when they do, they are found near word-intervals or at the beginning of words. Still, when one connects up points representing pauses in braille reading, the resulting line is also not straight.

## The Function of Pauses

Since in visual reading there is no perception during flying movements, it is during pauses that the reader perceives letters, words, or short sentences. We have noted also that few pauses occur in braille reading; when they do, they may be seen as "halting points," at which the reader takes the time to organize the differentiated parts of the text message into a meaningful whole. These pauses might then be said to be the rallying points for understanding.

As the sighted reader traverses the text, the groupings of letters, words, or short sentences that are sensorily perceived during a pause come into consciousness consecutively. From the psychological point of view, however, they are differentiated into words, phrases, clauses, and sentences only as they become integrated in understanding, i.e., in the totality of meaning. Perceptually, words or short sentences are broken into several-word fragments by flying movements of the eye, but the reader organizes these continually into a stream of whole meaning.

## The Function of Flying Movements

In visual reading, the pauses are the significant elements; flying movements are but links between them. But in braille reading, movements are of paramount significance, since braille characters come into consciousness one after another as the finger moves along the line of embossed text. It is in the continuous coursing of the finger along the line of braille text that the reader differentiates the successive characters into words, phrases, clauses, and sentences.

## The Function of Pauses and Movements

Functionally, the two modes of reading are identical. In visual reading, the reader perceives letters, words, or short sentences all at once during pauses; in braille reading, characters are perceived successively. The unit of perception is, therefore, momentarily much wider in the case of visual than in tactile reading. Yet braille reading speeds are not so slow as one would predict on the basis of number of perceptual units; the explanation is, of course, that reading is not perception merely, but perception

combined with other functions, and assisted by context and other factors.

## Methods of Perception

Several letters or words are perceived all at once at pauses in visual reading. At its most efficient, a short sentence can even be appreciated in its totality; the reader takes direct aim at the writer's thoughts, will, or intention. At its least efficient, the reader will attend to every letter or word in succession; here attention is not paid to the author's intention, but to the perception of letters in sentences. A pause signature identifies each of these: in the former, only a few, rhythmical pauses; in the latter, arhythmical pauses almost equaling the number of letters in a sentence line. Normal or average readers show mixed behavior, aiming now directly at the author's meaning, then at the perception of words or letters in sentences.

The best readers apprehend sentences through groups of words, or even short sentences: in terms of total word-count, the unit of perception would be these groups of words or short sentences. The poorest readers attend to every letter or spatial form successively, and the letter is the unit of perception.

Among braille readers, letters are perceived successively through movement of the finger(s). Among the best, letters become grouped in perception, as words or short sentences, and for the same reasons as in the best sighted readers. Among the poorest, as with poor sighted readers, every letter or spatial form is attended to. For the former group, there are few zig-zag, up-and-down, or fluttering movements; instances of irregular and/or ever-changing finger pressures during reading are also rare. In the latter group, however, both irregular movements and changing finger pressures almost equal the number of characters read in a line. As among sighted readers, the average braille readers display mixed modes of perceiving the text.

For the best braille readers, one might say that sentences are appreciated as a time-dependent *Gestalt;* words or (rarely) short sentences are grasped within the total word-count. Among the poorest readers, every character is perceived, one at a time, in a letter-by-letter method of approach.

The average reader of visual materials reads sentences with the help of some cues of words. In braille reading, this class of readers utilize the first and second and sometimes the third braille characters in words. Studies of dominating and subordinate braille characters support this interpretation. Furthermore, the concentration of both horizontal movements and vertical pressures on the braille characters in the first half of words confirm this view. For both sighted and blind average readers, word cues are important, as is the context of the sentence.

## Dominant and Subordinate Characters

Word recognition in visual reading depends on context and on shape characteristics; letter-shapes may be dominant or subordinate in characterizing the form of a word. A similar situation obtains in braille reading. The average braille reader uses cues given by the first one, two, or three characters or letters in a word; these are, therefore, the dominant letters in the sentence. It has been shown experimentally that, in addition, there are some characters which can be called tactually characteristic, or peculiar; there are also dominating letters or groups. As examples, one can cite *-tion*, *-ity*, and *-ify* in English and *-heit*, *-keit*, *-ung*, *-tsch*, *-sch*, and *-schaft* in German.

## Good and Poor Reading

When reading materials are of sufficient difficulty, even experienced readers will display many long pauses, or many irregular movements and pressures in braille reading; and even a beginner makes but a few short pauses or moves his finger(s) smoothly and with uniform pressure when reading easy texts. Thus, good or poor reading is not determined by reader or material alone, but by both in combination, and by the reader's understanding of the sentence meaning.

Good visual reading is characterized by a small number of short, regular pauses, no regressive movements, and well-adjusted return sweeps--combined with a deep and accurate understanding of the meaning of a text. Good braille reading is characterized by few zig-zag, up-and-down, or fluttering movements, uniform pressure of the finger on the page, no regressive movements, and well-adjusted movements between lines with the help of both hands--combined with a deep and accurate understanding of the meaning of the text. Poor readers of both types show deficiencies in one or more of these characteristics.

## Return Sweeps and Movements Between Lines

Visual reading typically shows return sweeps shorter than the line of text, since the pauses at the beginning and end of the sentence are usually inside the line. In one-handed braille reading, return movement length between successive lines of text are always longer than the text line, since verification of the end of one line and the beginning of the next has to proceed tactually. Return sweeps in one-handed braille reading are therefore longer than the return sweep in visual reading. For both types of reading, the movements of eye and of finger eventually become habituated motor acts, and unnecessary movements at the beginnings and ends of lines gradually come to display extreme regularity as the reader goes down a page. If anomalies (e.g., misprints; difficult, strange, or unknown words; etc.) occur, however, the smoothness of the motor behavior is disrupted. The relative fragility of this kind of habituation has led the author to label this a "short-lived habit."

Bimanual braille reading does help to overcome the handicaps of the single finger in making return sweep movements. The help of the accompanying or assisting finger helps control the movement of the reading finger, and prevents maladjusted over- or underestimated return sweep movements; while the reading finger finishes one line of text, the controlling finger returns to the location of the beginning of the next line and awaits contact with the reading finger. The reading finger moves very swiftly to make this collision; then both fingers read along the line until near the end of the line, when the controlling finger separates to make the return sweep. This is the reading method described in Part One as Type 3 bimanual reading. It is the most purposive and efficient movement for return in braille reading, since it widens the tactual field and lessens the demand for accuracy in the movement of the reading finger to the next line of text; the reading is thus doubly assisted. In visual and tactual reading, return sweeps are rapid and pauseless; over- and underestimations are functionally similar in sighted and one-handed tactual reading.

## Both Eyes and Both Hands

In the sighted reader, the *musculi rectus superioris, rectus inferioris, obliquus superioris, obliquus inferioris, rectus lateralis*, and *rectus medialis* left eye work with those of the right eye in correspondence. Such movements are "mechanical," in the sense that we cannot control them voluntarily (to view the beginning of one line with the left eye, and the end of the prior line with the right is physiologically impossible); moreover this occurs quite without conscious knowledge of the activity. In braille reading, however, both hands are entirely under voluntary control, especially in the early stages of learning braille; the reading finger is merely "accompanied" by the other finger. The reading finger perceives something when it touches something; until that happens, it perceives nothing. Something akin to "indirect vision" in tactual reading would, therefore, materially assist perception; the accompaniment of the non-reading finger widens the perceptual aperture.

In reading with both hands, the reader attains reassurance. For one-hand reader, a missed point in the text becomes lost and relocation consumes much time. A bimanual reader, on the other hand, "holds" at the point where a loss is noted, and the

reading finger can be brought back quickly to the same spot. The technique evidently produces a feeling of ease in the reading task. Misprints, spoiled embossed dots, obscure characters, and unfamiliar, strange, or difficult words can all be indexed by the accompanying finger, while the reading finger scans the line to help organize meaning. In some cases, both fingers are reading fingers, with either serving as an indexer and the other searching the context for meaning. Here, generally, the left finger runs backward while the right finger is stopped at some point; or the right finger may run forward while the left indexes a point on the line.

The return movement between lines, referred to earlier as Type 3, is the most efficient. The controlling finger allows for a double tactual field when allied with the reading finger. It also makes possible the simultaneous location of the beginning of the next line of text while the right finger finishes reading the previous one. Finally, note that the movements of the two fingers are under voluntary control, at least at first; but when the reader achieves competence in bimanual reading, and there are no anomalies in the text, the two hands work almost automatically at their respective tasks of reading and controlling.

## Summary

This monograph is concerned with a series of experimental investigations of visual and tactile reading. Classical theories of visual and tactile reading are examined closely, compared with experimental results, and found wanting; an alternative theory is developed on the basis of the results of experimental trials.

Examination of tactile reading, using both hands, reveals the following: the hand movements are uniform in rate and parallel in displacement; there is but a small temporal difference between reading with one hand as compared to reading with both hands; and blind braille readers report that reading with one hand is no more difficult than reading with both hands. On the basis of these results, and the fact that correct appreciation of braille is possible when reading with one finger only, it is concluded that the second reading finger performs no essential function in the tactile reading process.

This result, contrary to that predicted by classical theory, leads to the building of an alternative theory based on experiments. The experiments indicate that in the two-handed reading of braille texts, one finger reads while the other checks and confirms what has been read, thus enhancing the security of the reader's understanding of the text. In this respect, two-handed reading is shown to have just this advantage in experiments exploring between-lines movements of the hands. Further, it is shown that the majority of movements are a function of the reading aperture, in the sense of concentrating on individual letters, or on entire words or sentences. The greater the reading experience, the greater the intelligence of the reader, and the greater his understanding of the text, the fewer are the movements in reading the braille text. It is concluded that a row of homogeneous figures is both differentiated and integrated at the same time. Therefore, in tactile reading, comprehension occurs through appreciation of whole word and whole sentence configurations (not through the integration of individual letters) and through the cognitive linking of sentence meanings.

The movements of the eye in visual reading were explored using the artificial mobile eye, light reflections from a contact lens, and the ophthalmograph. Eye pauses and eye movements were examined in detail; number and duration were measured and compared with line length, the nature of the text, and the adjustment of the reader.

It is concluded that although visual and tactile reading differ in many ways, they have a basic similarity of psychological function.

A final section examines the individual procedures in tactile and visual reading. There is a commonality between pauses in eye reading and touching motions in tactile reading; pauses correspond to touching motions. Pause time corresponds to motion time; both increase or decrease as a function of attending to individual characters vs. whole words and whole sentences.

# BIBLIOGRAPHY


Ahrens, A. *Die bewegung der augen beim schreiben.* Rostock: 1891.

Anderson, I. H., & Swanson, D. E. Common factors in eye-movement in silent and oral reading. *Psychological Monographs*, 1937, 48.

Bürklen, K. *Blindenpsychologie.* Leipzig: Johann Ambrosius Barth, 1924.

Buswell, G. T. An experimental study of the eye-voice span in reading. *Supplementary Educational Monographs*, 1920, 17.

Buswell, G. T. Fundamental reading habits: A study of their development. *Supplementary Educational Monographs*, 1922, 21.

Dearborn, W. F. The psychology of reading: An experimental study of reading pauses and movements of the eye. *Archives of Philosophy, Psychology, and Scientific Methods*, 1906, 1(4), 5-134.

Dearborn, W. B. *The psychology of reading.* 1936.

Dodge, R. Visual perception during eye movement. *Psychological Review*, 1900, 7, 454-65.

Dodge, R. An experimental study of visual fixation. *Psychological Review, Monograph Supplement*, 1907, 35, 95.

Erdmann & Dodge. *Psychologische untersuchungen über das lesen.* Halle: 1898.

Erdmann & Dodge. Zur erlauterung unser tachistoskopischen versuch. *Zeitschrift für Psychologie*, 1900, 22.

Frandsen, A. An eye-movement study of objective examination questions. *Genetic Psychology Monographs*, 1934, 16.

Futch, O. A study of eye-movements in reading of Latin. *Journal of General Psychology Monographs*, 1935, 13.

Gigerl, E. Lesen. In A. Mell (Ed.), *Enzyklopädisches handbuch des blindenwesens.* Wien: A. Pichlers Witwe and Sohn, 1900.

Gray, C. T. Types of reading ability as exhibited through tests and laboratory experiments. *Supplementary Educational Monographs*, 1917, 1(5).

Gray, C. T. *Deficiencies in reading ability.* New York: D. C. Heath, 1922.

Heller, T. *Studien zur blindenpsychologie.* Leipzig: 1895.

Hocheisen, P. *Der muskelsinn der blinden.* Berlin: 1892.

Hocheisen, P. Über den muskelsinn bei blinden. *Zeitschrift für Psychologie und Physiologie der Sinnesorgane*, 1893, 5, 239-82.

Huey, E. B. *The psychology and pedagogy of reading.* 1908.

Javal, E. Essai sur la physiologie de la lecture. *Annales d'Oculistique*, 1879, 82, 242-53.

Javal, E. *Physiologie de la lecture et de l'ecriture.* Paris: F. Alcan, 1905.

Judd, C. H. Photographic records of convergence and divergence. *Psychological Review, Monograph Supplement*, 1907, 34, 370-423.

Judd, C. H., & Buswell, G. T. Silent reading: A study of the various types. *Supplementary Educational Monograph*, 1922, 23.

Judd, C. H., McAllister, C. N., & Steele, W. M. *Psychological Monographs*, 1905, 7, 1.

Lamansky, S. *Arch. f. d. ges. Physiol.*, 1869, 2, 418.

Landolt, S. Nouvelles recherches sur la physiologie des movements des yeux. *Archives d'Ophtalmologie*, 1891, 11, 385-95.

McAllister, G. M. Reading ability. *Chicago School Journal*, 1936, 18.

Mell, A. (Ed.). *Enzyklopädisches handbuch des blindenwessens.* Wien: A. Pichlers Witwe und Sohn, 1900.

Mell, A. (Ed.). *Der blindenunterricht.* Wien: A. Pichlers Witwe und Sohn, 1910.

Schmidt, W. A. An experimental study in the psychology of reading. *Supplementary Educational Monographs*, 1917, 2.

Steinberg, W. *Die raumwahrnehmung der blinden.* München: Ernst Reinhardt, 1920.

Tanaka, H. *Fundamental research on language and reading.* Osaka: 1920.

Tinker, M. A. Eye movements in reading. *Journal of Educational Research*, 1936, 30, 241-77.

Vernon, M. D. Characteristics of proof-reading. *British Journal of Psychology*, 1920, 17.

Vernon, M. D. *The experimental study of reading.* Cambridge: Cambridge University Press, 1931.

Walker, R. Y. The eye-movement of good readers. *Psychological Monographs*, 1933, 44.

Wundt, W. *Grundzüge der physiologischen psychologie.* Bd. 1 (6 Aufl.). Leipzig: W. Engelmann, 1910.

Zech, F. Zur lehre vom tasten. *Blindenschule*, 1918, 3/4.

HV1669 Kusajima, T.
K968 Visual reading and
braille reading: an
experimental
investigation of the
E.15

| DATE DUE | | |
|---|---|---|
| | | |
| | | |
| | | |
| | | |
| | | |
| | | |
| | | |
| | | |
| | | |
| | | |
| | | |

AMERICAN FOUNDATION FOR THE BLIND
15 WEST 16th STREET
NEW YORK, N.Y. 10011

AMERICAN FOUNDATION FOR THE BLIND, INC.
15 WEST 16TH STREET, NEW YORK, N.Y. 10011